4 – STEERING GEAR

2/73 **40/A**
2/73 **40/B** — STEERING GEAR : Housing, Pinion

2/73 **40/C**
2/73 **40/D** — STEERING GEAR : Rack

2/73 **41/A**
2/73 **41/B** — Steering Column, Steering Wheel **(1 st. Type)**

2/73 **41/C**
2/73 **41/D** — Steering Column **(2 nd. Type)**

2/73 **41/E**
2/73 **41/F** — Steering Wheel **(2 nd. Type)**

2/73 **41/G**
2/73 **41/H** — Steering Column Jacket ; Shells **(1 st. Type) (Gas (petrol) Engine)**

2/73 **41/I**
2/73 **41/J** — Steering Column Jacket **(2 nd. Type) (Gas (petrol) Engine)**

2/73 **41/K**
2/73 **41/L** — Steering Column Shells **(2 nd. Type) (Gas (petrol) Engine)**

2/73 **41/M**
2/73 **41/N** — Steering Column Jacket; Shells **(Diesel)**

42/A through **42/AD** — Brakes : Brake Plates; Brake Shoes; Brake Drums and Discs (See detailed contents on title-page of sub-group 42

2/73 **43/A**
2/73 **43/B** — Brakes **(Non Assisted)** Detail of Brake Plates **(Drum Type)**

2/73 **43/C**
2/73 **43/D** — Brakes **(Assisted)** Detail of Brake Plates **(Drum Type)**

2/73 **44/A**
2/73 **44/B** — Brakes **(Non Assisted)** Front Brake Cylinders

2/73 **44/C**
2/73 **44/D** — Brakes **(Assisted) (Drum Type)** Front Brake Cylinders

2/73 **44/E**
2/73 **44/F** — Brakes **(Non Assisted)** Rear Brake Cylinders

2/73 **44/G**
2/73 **44/H** — Brakes **(Assisted)** Rear Brake Cylinders

2/73 **44/I**
2/73 **44/J** — Brakes **(Assisted)** Rear Brake Cylinders (Cont'd)

2/73 **44/K**
2/73 **44/L** — Brakes **(Assisted) (Disc Type)** Front Brake Pistons

2/73 **44/M**
2/73 **44/N** — Brakes **(Assisted) (Disc Type)** Front Brake Pistons (Cont'd)

2/73 **45/A**
2/73 **45/B** — Brake Pedal **(Non Assisted Brakes) (Conventional Transmission C3)**

2/73 **45/C**
2/73 **45/D** — Brake Pedal **(Non Assisted Brakes) (Conventional Transmission C3)** (Cont'd)

Printed in France

BRAKES

2/73	**45/E**	Brake Pedal **(Non Assisted Brakes)**
2/73	**45/F**	**(Transmission : Conventional BA7 and Automatic**
2/73	**45/G**	Brake Pedal **(Assisted Brakes)**
2/73	**45/H**	**(Transmission : Conventional C3 and Automatic**
2/73	**45/I**	Brake Pedal **(Assisted Brakes)**
2/73	**45/J**	**(Transmission : Conventional BA7 and Automatic**
2/73	**45/K**	Brakes **(Assisted)** : Hydrovac,
1/72	**45/L**	Contactor, Hoses
1/72	**45/M**	Brakes **(Assisted)**
2/73	**45/N**	Hydrovac, Contactor, Hoses (Cont'd)
2/73	**45/O**	Brakes **(Assisted)** :
2/73	**45/P**	Mastervac, Hydrovac (Cont'd)
2/73	**46/A**	Brakes **(Non Assisted)** :
2/73	**46/B**	Master-Cylinder **(Sedan, Cabriolet, Coupé)**
5/72	**46/C**	Brakes **(Non Assisted)** : Master-Cylinder
1/72	**46/D**	**(Utility Vehicles)**
10/67	**46/E**	Brakes **(Assisted) (Drum Type)** :
2/73	**46/F**	Master-Cylinder
2/73	**46/G**	Brakes **(Assisted) (Disc Type)** :
2/73	**46/H**	Master-Cylinder **(Sedan)**
2/73	**46/I**	Brakes **(Non Assisted)** :
2/73	**46/J**	Brake Fluid Reservoirs, Brake Fluid
2/73	**46/K**	Brakes **(Assisted)** :
4/72	**46/L**	Brake Fluid Reservoirs, Brake Fluid
4/72	**46/M**	Brakes **(Assisted)** :
2/73	**46/N**	Brake Fluid Reservoirs, Brake Fluid
2/73	**47/A**	Parking Brake Control
2/73	**47/B**	
2/73	**47/C**	Parking Brake Control (Cont'd)
2/73	**47/D**	
2/73	**48/A**	Brakes **(Non Assisted) (Pipes ∅ 4.85 x 6.35mm)** :
2/73	**48/B**	Pipes, Hoses, Unions, Actuating Cables **(Rear)**
2/73	**48/C**	Brakes **(Non Assisted) (Pipes ∅ 3.34 x 4.76mm)** :
2/73	**48/D**	Pipes, Hoses, Unions **(Front)**
2/73	**48/E**	Brakes **(Non Assisted) (Pipes ∅ 3.34 x 4.76mm)** :
2/73	**48/F**	Pipes, Hoses, Unions, Actuating Cables **(Rear)**
2/73	**48/G**	Brakes **(Non Assisted) (Pipes ∅ 3.34 x 4.76mm)** :
2/73	**48/H**	Pipes, Hoses, Unions, Actuating Cables **(Rear)** (Cont'd)
2/73	**48/I**	Brakes **(Assisted)** :
2/73	**48/J**	Pipes, Hoses, Unions **(Front)**
2/73	**48/K**	Brakes **(Assisted)** : Pipes, Hoses, Unions,
2/73	**48/L**	Actuating Cables **(Rear) (404,404C)**
2/73	**48/M**	Brakes **(Assisted)** : Pipes, Hoses, Unions,
2/73	**48/N**	Actuating Cables **(Rear) (404L,404U6A)**

HOUSING, steering gear :

4002.17	assembly	→| 1973 Motor-Show	1
4002.18	assembly		1
4002.45	assembly	|→ 1973 Motor-Show	1
4002.46	assembly		1
4004.15	only		1
4004.16	only		1
4026.02	SEAL, rubber, 28 x 5 mm.		1
4026.04	WASHER, foil, 28,1 x 40 x 0,2 mm.		1
4030.06	CUP, closing		1
4040.05	BLOCK, rubber, 20,5 x 13 mm. : →| 404XC5.TW : 4.262.348, 4.525.038 ; C : 4.495.608 ; 4.590.306 |→ 404XC5.TW : 5.071.600, TH : 5.308.500 ; XC6 : TW : 5.085.000 ; TH : 5.415.000, 8.256.600, 8.243.000, USA : 8.325.000, 8.327.500 ; D : 4.629.000, C : 4.670.200, 6.801.500, LXC5 : TW : 7.000.100 ; TH : 4.882.600 ; LXC6 : TW : 4.941.600, TH : 6.826.000 : LD : 4.986.700 ; U6A : 1.932.300, 7.100.100		1
4040.07	FLECTOR, with bolts and washers	→| 1973 Motor-Show	1
4041.02	WASHER		2
4040.14	FLECTOR with bolts and washers	|→ 1973 Motor-Show	1
4043.15	NUT		4
4042.09	COLLAR ASSY.		1
4042.05	CLIP, retaining (|→ 404XC5 : TW : 5.056.359, TH : 5.139.924, 4.535.335, 4.577.770 ; D : 4.608.520 ; C : 4.498.404, 4.595.490 ; LXC5 : TW : 4.854.584 ; LTH : 4.857.000 ; LD : 4.980.694 ; U6 : 4.744.737 ; U6D : 4.909.397 and U6A : 1.924.030 →| 5.060.320, 5.187.363, 4.535.924, 4.587.065, 4.611.155 ; 4.498.640, 4.596.607, 4.895.520, 4.863.964, 4.981.528, 4.749.473, 4.910.265 and 1.925.751)		1
4043.11	SCREW, clamping, 7 x 38 mm.		1
4043.07	SCREW, attaching, 8 x 30 mm., with washer and nut →| 1973 Motor-Show		4
4048.17	PINION, driving, 8 ▲▲▲ , with nut Fit 1 rack 4056.05	→| 404 : 4.025.422, 4.501.172	1
4048.18	PINION, driving, 8 ▲▲▲ , with nut Fit 1 rack 4056.06		
4051.03	BEARING, ball, 17 x 40 x 12 mm. (See 57 EF)		1

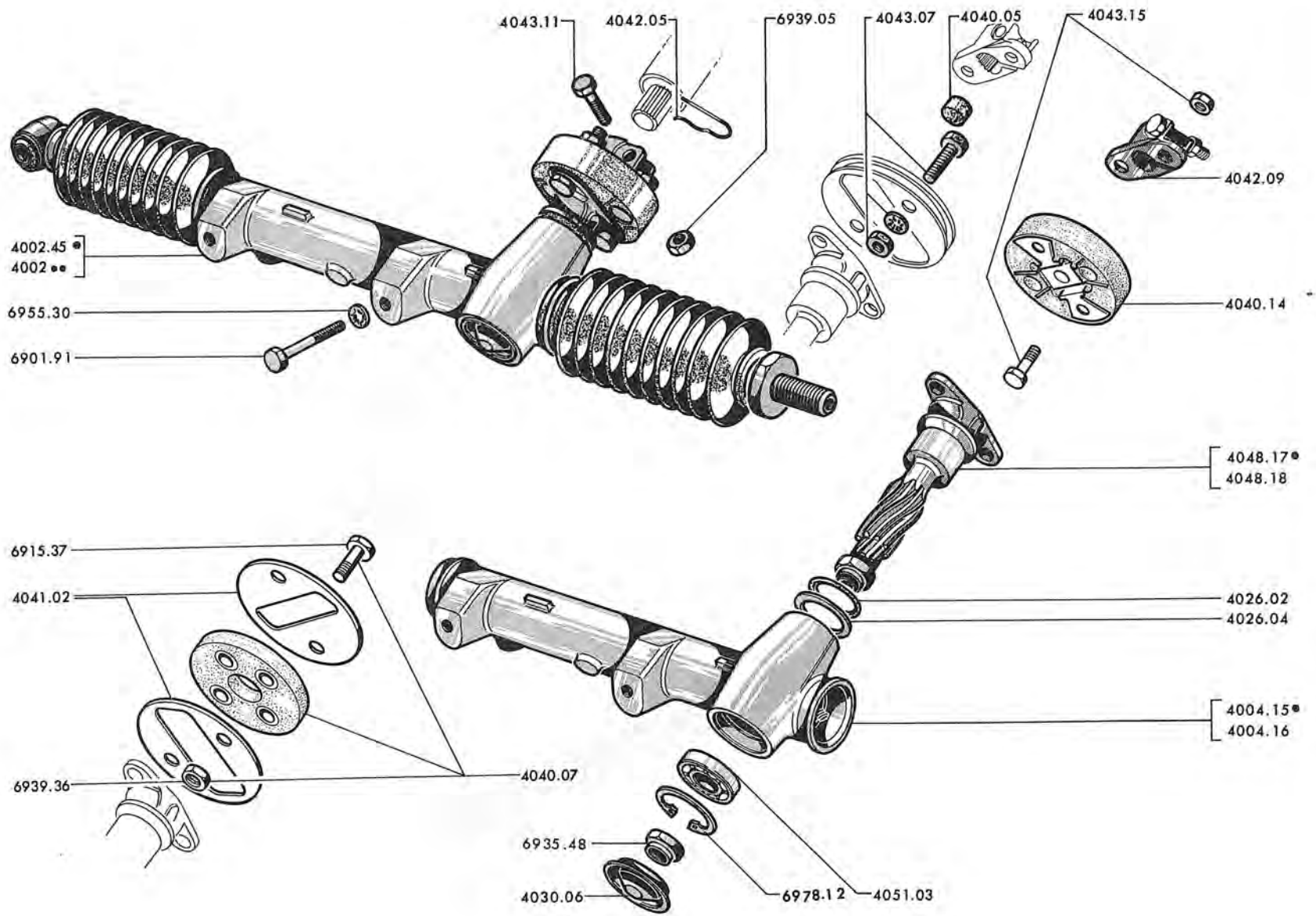
4043.11
4042.05
6939.05
4043.07
4040.05
4043.15
4042.09
4002.45 •
4002 ••
6955.30
6901.91
4040.14
4048.17•
4048.18
6915.37
4041.02
4026.02
4026.04
4004.15•
4004.16
6939.36
4040.07
6935.48
4030.06
6978.12
4051.03

40 C - 404

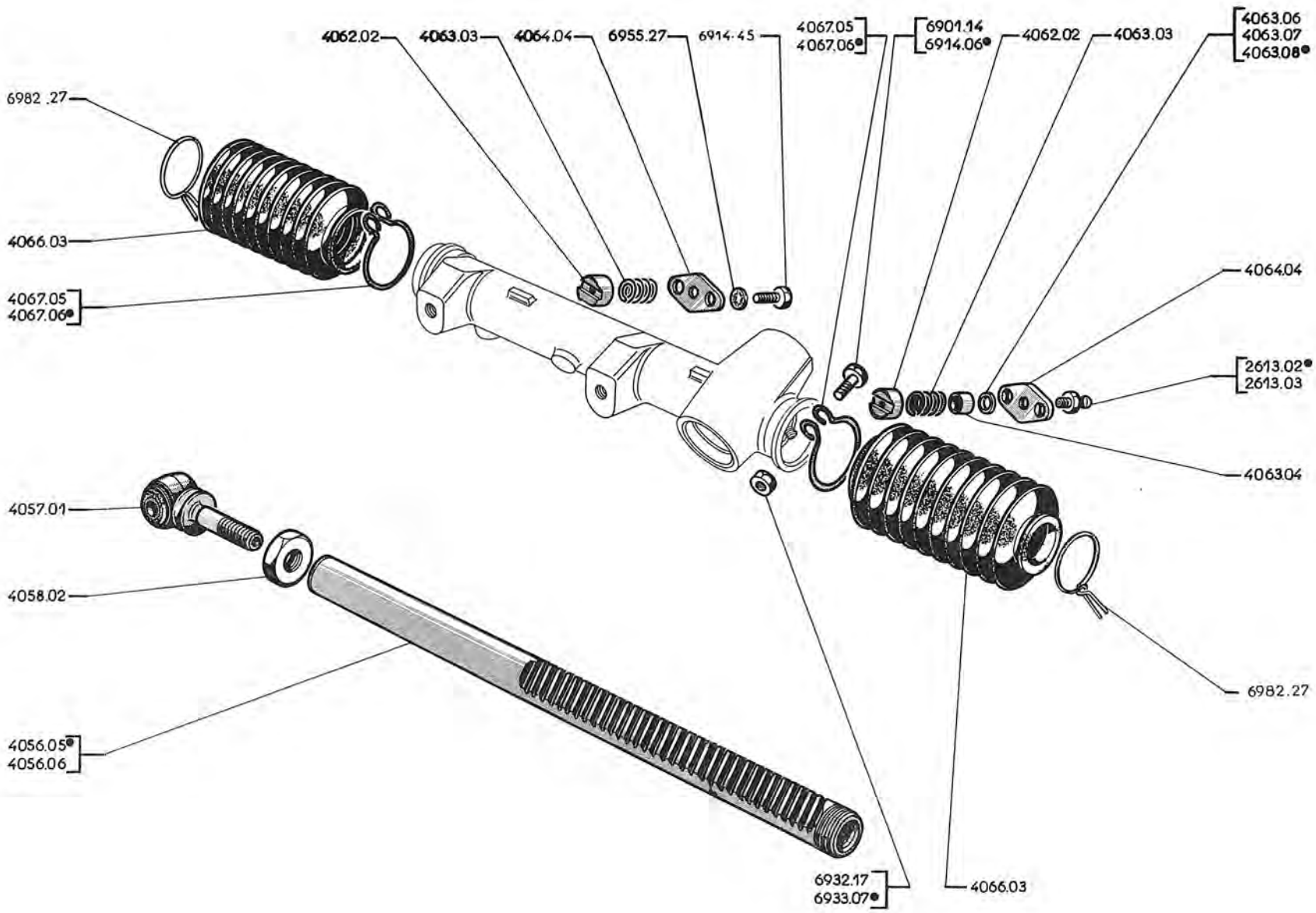

Printed in France

	RACK, steering gear, 32 ▲▲▲, only :	
4056,05	(fit driving pinion 4048.17 → 404:4.025.422,4.501.172)	1
4056.06	(fit driving pinion 4048.18 → 404:4.025.422,4.501.172)	1
4057.01	EYE, with elastic bushing	1
4058.02	LOCKNUT, 16 mm.	1
4062.02	PLUNGER	2
4063.03	SPRING, steering gear rack plunger	2
4063.04	BUSHING, nylon, 8 x 16 x 13.2 mm.	1
4063.06	SHIM, adjusting, 8.25 x 16 x 0.1 mm.	-
4063.07	SHIM, adjusting, 8.25 x 16 x 0.2 mm.	-
4063.08	SHIM, adjusting, 8.25 x 16 x 0.5 mm.	-
4064.04	PLATE, retaining, steering gear rack plunger spring	2
2613.02	NIPPLE, grease, diam. 8 mm., length : 19.5 mm.	2
2613.03	NIPPLE, grease, diam. 8 mm., length : 22.5 mm.	1
4066.03	PROTECTOR, rubber, steering, gear rack	2
4067.05	CLIP, Ø 45 mm., steering gear rack protector (inner side) (→ 404:4.008.046,4.500.186)	2
4067.06	CLIP, Ø 49 mm., steering gear rack protector (inner side) ↦ 404:4.008.046,4.500.186 and all other types (See 52EF)	2
4068.01	CLIP, Ø 31 mm., steering gear rack protector (outer side)	2

	A – →| 404:4.262.348,4.525.038	A	
	B – →| 404C:4.495.608,4.590.306		B
4101.35	STEERING COLUMN ASSY., (with gear change bar, without lever) ( ) (fit control rod 2444.18, steering column shells 4130.27 or 4130.28, 7 screws 6910.42. 1 finger 2410.07)	1	1
4103.26	SHAFT, steering column, only	1	1
	STEERING WHEEL :		
4107.04	«Noir», with horns control ring and badge-cap — fit 1 push-plate 6255.07, 1 plate 4113.04, 1 spring 6262.04, 1 cup 6261.04, 1 snap-ring 4113.05, 1 washer 4110.05	1	1
4107.05	«Ivoire 3008», with horns control ring and badge-cap	1	
4108.36	«Ivoire 3008», only	1	
4108.37	«Noir», only		
4110.03	RING, paper, 51 x 79 x 0.2 mm., anti-rattler	1	
4111.07	BADDE-CAP, horns control ring	1	
4111.08	BADGE-CAP, steering wheel		1
4112.31	CONTROL, horns, «Noir», with ring	1	
4113.01	PLATE, fastening	1	
4113.02	SNAP-RING, horns control	1	
4113.03	SNAP-RING, badge-cap		1

Printed in France

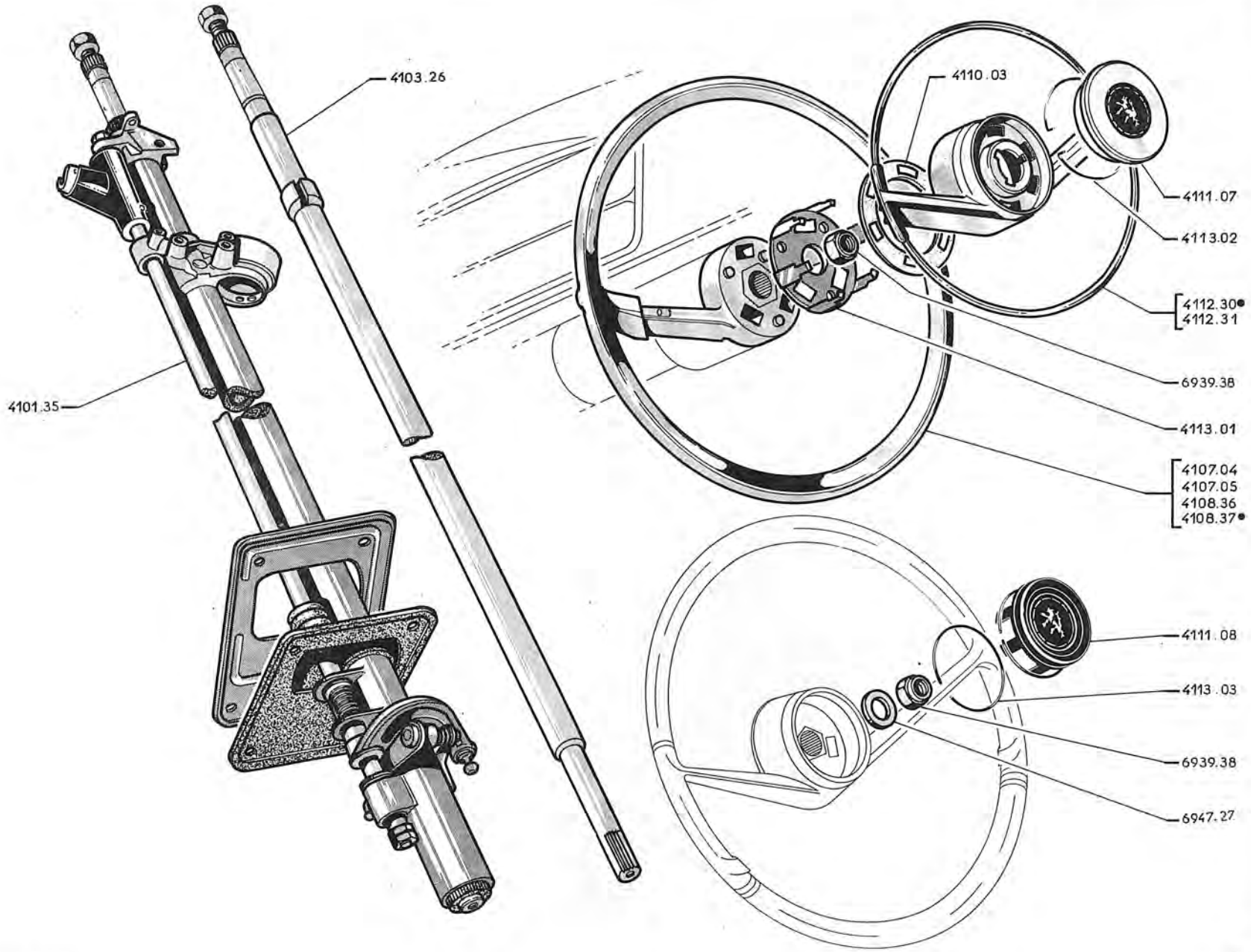
4103.26
4101.35
4110.03
4111.07
4113.02
4112.30●
4112.31
6939.38
4113.01
4107.04
4107.05
4108.36
4108.37●
4111.08
4113.03
6939.38
6947.27

41 C - 404

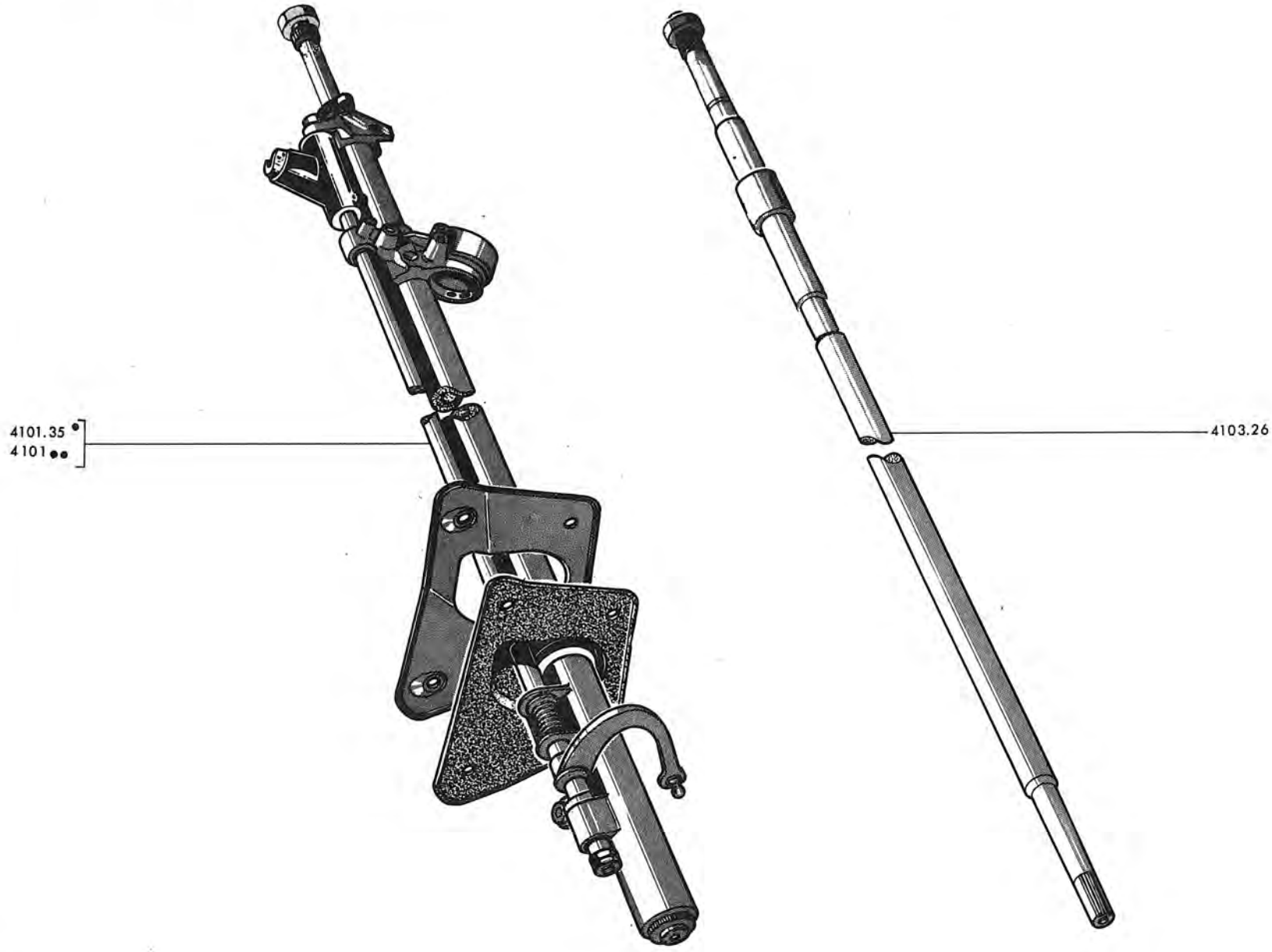

Printed in France

STEERING COLUMN ASSY., (with gear change bar, without lever) (◠) :

Part Number	Types	Applicability
4101.34	DIESEL	→| 404 DA : 3.060.632 ; LD : 4.977.068 ; U6D : 1.904.201 (fit 1 finger 2410.07 ; moreover fit control rod 2444.18 and steering column shells 4130.31 or 4130.32 →| 404 LD : 4.975.292 ; U6D : 4.900.882)
4101.30		|→ 404 DA : 3.060.632 ; D : 4.600.000 ; LD : 4.977.068 ; U6D : 4.904.201 ; →| 3.060.687, 4.629.000, 4.986.700, 4.917.500
4101.35	GAS (Petrol) Engine (Except Coupler)	→| 404 : 4.399.083, 4.556.165 ; C : 4.497.121, 4.592.234 ; L : 4.838.006 ; U6 : 4.720.034 and U6A : 1.921.000 (fit 1 finger 2410.07) ; moreover fit control rod 2444.18 and steering column shells 4130.27 or 4130.28 →| 404 : 4.300.583, 4.550.906 ; C : 4.495.784, 4.590.814 ; L : 4.826.815 ; U6 : 4.704.339)

SHAFT, steering column, with nut-, only :

4103.26 (USA) →| 1967 Motor-Show and except (USA) →| 404 XC5 : 5.073.946 ; XC6 : 5.587.988, 8.265.378 ; D : 4.663.905 ; LXC5TW : 7.120.621 ; LXC6TW : 4.943.584 ; LTH : 6.869.511 ; LD : 4.995.987 ; U6 : 4.790.768 ; U6D : 4.928.032 ; U8 : 7.023.893 ; U8D : 7.052.749 ; U10 : 7.137.629 ; U10D : 7.087.073 ; all Coupler, Injection, A8, 404/8, DA, C, LXC5TH, U6A 1

4103.27 |→ 404 XC5 : 5.073.946 ; XC6 : 5.587.988, 8.265.378 ; D : 4.663.905 ; LXC5TW : 7.120.620 ; LXC6TW : 4.943.584 ; LTH : 6.869.511 ; LD : 4.995.987 ; U6 : 4.790.768 ; U6D : 4.928.032 ; U8 : 7.023.893 ; U8D : 7.052.749 ; U10 : 7.137.629 ; U10D : 7.087.073 and all 404U6S, U7 1

C3 Transmission (Early Type Gear Layout)	A – All types ..... A
BA7 Transmission (European Type Gear Layout)	B – Except 404/8, U6, U6D, U7, U7D, U8, U8D, U10, U10D ..... B
	C – All 404/8, U6, U6D, U7, U7D, U8, U8D, and 404 U10, U10D (S) → 1973 Motor-Show C
	D – All 404 U10, U10D (S) ↦ 1973 Motor-Show ..... D

	WHEEL, steering :				
4107.04	«Noir» with horns control ring and badge-cap	1			
4107.05	«Ivoire» 3008, with horns control ring and badge-cap (→ 1965 Motor-Show)	1			
4107.15	«Noir» with horns control ring and cushioning pad (Except USA)		1		
4108.39	«Ivoire» 3008, only (→ 1965 Paris Motor-Show)	1			
4108.40	«Noir» only	1			
4108.48	«Noir» only			1	
4108.51	«Noir» only			1	1
4110.05	WASHER, paper, 50 x 68,5 x 0,2 mm. anti-rattler	1			
4111.09	BADGE-CAP, «Ivoire» 3008, horns control ring (→ 1965 Paris Motor-Show)	1			
4111.10	BADGE-CAP, «Noir» with snap-ring, horns control			1	
4111.12	BADGE-CAP, «Noir» horns control ring	1			
4111.17	PAD, cushioning, steering wheel, «Noir»			1	1
4111.28	CUP, retaining, horns control badge-cap (◠) (↦ 404U6 : 4.790.768 ; U6D : 4.928.032 ; U8 : 7.023.893 ; U8D : 7.052.749 ; U10 : 7.137.629 ; U10D : 7.087.073)			1	
4112.33	RING, horns control	1			
4112.40	RING, horns control, all USA and column «D»			1	1
4112.41	RING, horns control (except USA)			1	
4113.03	SNAP-RING			1	
4113.04	PLATE, fastening	1			
4113.05	SNAP-RING, horns control ring	1	1	1	
4113.06	SNAP-RING, Ø 75 mm.	1			
4113.08	PLATE, fastening, horns control ring			1	1

Printed in France

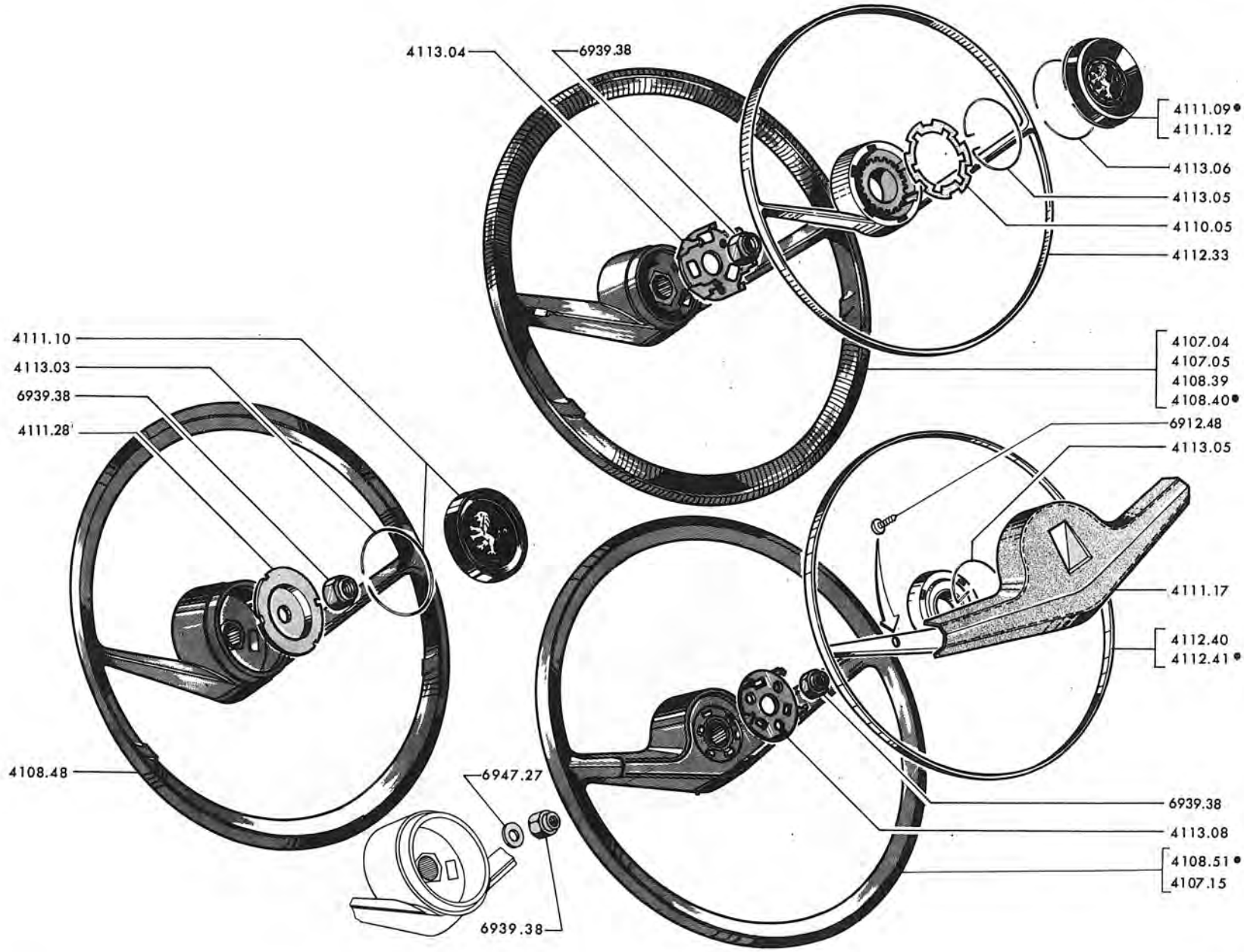
4113.04
6939.38
4111.09 •
4111.12
4113.06
4113.05
4110.05
4112.33
4107.04
4107.05
4108.39
4108.40 •
4111.10
4113.03
6939.38
4111.28
6912.48
4113.05
4111.17
4112.40
4112.41 •
4108.48
6947.27
6939.38
6939.38
4113.08
4108.51 •
4107.15

41 G - 404

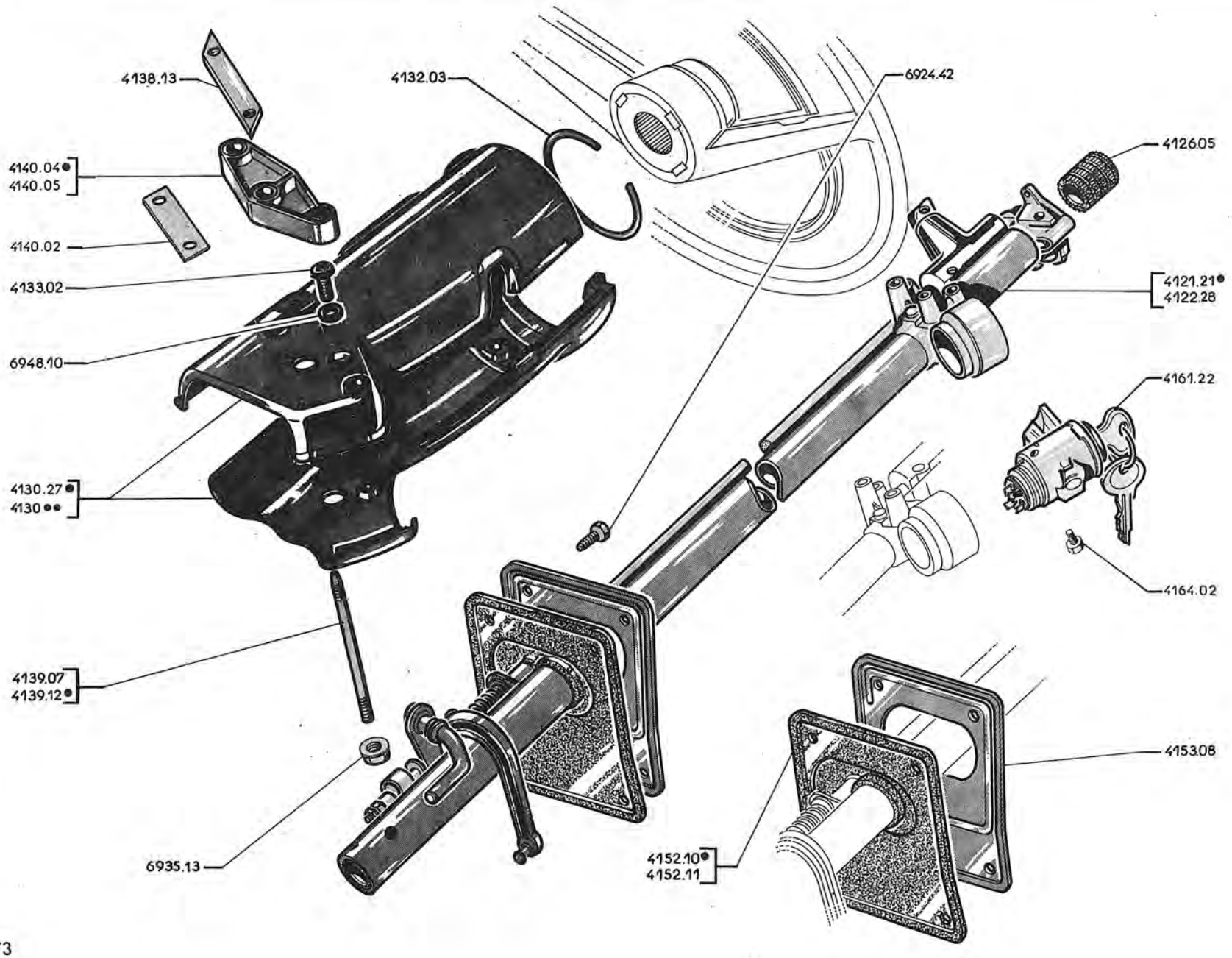
4138.13
4132.03
6924.42
4126.05
4140.04●
4140.05
4140.02
4133.02
4121.21●
4122.28
6948.10
4161.22
4130.27●
4130●●
4164.02
4139.07
4139.12●
4153.08
6935.13
4152.10●
4152.11

→ 404:4.399.083,4.527.033,4.556.165;C:4.497.121,4.592.234; L:4.838.000;U6:4.720.000;U6A:1.921.000

	JACKET, steering column, assy. :	
4121.21	with gear change mechanism, rubber gasket and backing plate (Mechanical Clutch) (fit 1 finger 2410.07 and 7 screws 6910.42) (fit the control rod 2444.18 → 404:4.300.583; 4.550.906;C:4.495.784,4.590.814;L:4.826.815;U6:4.704.339;U6A:1.920.000; in addition, fit the shells 4130.27 or 4130.28 → 404: 4.106.232)	1
4122.48	w/o gear change mechanism, w/o rubber gasket nor backing plate ( ) (fit 4 screws 6910.42, 1 jack-lever 2435.16, 2 bushing 2439.04, 1 washer 6946.13, 1 cotter pin 6969.20) (moreover, fit the shells 4130.27 or 4130.28 → 404:4.106.232; (also fit jack-lever 2435.12, and nylon shoe 2436.08 → 404:4.013.540,4.500.741)	1
4126.05	BUSHING, guide, 19 x 28 x 30 mm.	2
	SHELL, upper and lower, assy. :	
4130.27	« Ivoire 3008 » ( )	
4130.28	« Noire » ( )	
4130.29	« Ivoire 3008 » ( )	1
4130.30	« Noir » ( )	
4132.03	HOOP, anchor, steering column shells	1
4133.02	SCREW, cross-recessed washer head, cone point, 4 x 12 mm., (See 16 YZ, 16 AC, AD 62 IJ)	5
4138.13	BRACKET attaching steering column jacket on dashboard	1
4139.07	STUD, 7 x 12 x 75 mm., (→ 404:4.262.348,4.525.038)	2
4139.12	STUD, 7 x 12 x 91 mm., (→ 404:4.262.348,4.525.038,4.550.000; all 404C,L,U6,U6A)	2
4140.02	PLATE, thrust (→ 404:4.262.348,4.525.038)	1
4140.04	SPACER, attaching « Noir » steering column jacket	
4140.05	SPACER, attaching « Ivoire 3008 », steering column jacket	→ 404:4.262.348,4.525.038 4.550.000; all 404C,L,U6,U6A 1
4152.10	GASKET, rubber, steering column jacket ( )	
4152.11	GASKET, rubber, steering column jacket ( )	1
4153.08	PLATE, backing, steering column jacket rubber gasket ( )	1
4161.22	LOCK, ignition and steering (with 2 keys) (fit one flat type terminal 6540.14 on the leading-in wire)	1
4164.02	SCREW, hex-head, 3.5 x 6.5 mm., ignition and steering lock fixing	1

Passengers' Room Increased	C3 Transmission (Early Type Gear Layout)	A – → 404TW:4.399.083;TH:5.100.000,4.527.033,4.556.165; (USA) :4.399.083, 8.250.000;A8:1.910.000;C:4.497.121,4.592.234;LTW:4.838.000;LTH: 4.855.000;U6:4.720.000;U6A:1.921.000, 7.100.000 and all XC6, Auto-Trans., LXC6	A
	BA7 Transmission (European Type Gear Layout)	B – → 404XC5:5.073.946;XC6:5.587.988,8.265.378;404/8:6.909.676; C:4.671.100,6.803.500,LXC5TW:7.120.621;LXC6TW:4.943.584;LTH: 6.869.511;U6:4.790.768;U8:7.023.893;U10:7.137.629 and all 404 Injection, (USA) ,LXC5TH;U6A	B
		C – → 404XC5:5.073.946;XC6:5.587.988;8.265.378;LXC5TW:7.120.621; LXC6TW:4.943.584;LTH:6.869.511;U6:4.790.768;U8:7.023.893;U10: 7.137.629 and all 404U6S,U7	C

	JACKET, steering column, assy.- with gear change mechanism, rubber gasket and backing plate ( ) (mechanical clutch) (Except Auto-Trans.) :			
4121.18	(fit finger 2410.07 → 404XC5TW:5.064.900;TH:5.250.548;8.211.072;A8:1.910.300; C:4.499.020,4.598.042;LXC5TW:4.897.600,LTH:4.872.945;U6:4.756.607;U6A:1.927.062 moreover fit 7 screws 6910.42 (a)	1		
4121.24	Except (USA)	1		
4121.27		1		
	JACKET, steering column, assy. w/o gear change mechanism, w/o rubber gasket nor backing plate :			
4122.48	(Except Auto-Trans.) (fit 1 jack-lever 2435.16, 2 bushings 2439.04, 1 washer 6946.13 1 cotter pin 6969.20 → 404XC5TW: 5.068.091;TH:5.293.144,8.221.654;A8:1.910.350; C:4.499.258,4.599.015;LXC5TW:4.898.406;LTH:4.879.695;U6:4.761.500;U6A:1.927.914 moreover fit 4 screws 6910.42 (*)	1		
4122.54	Except (USA) and Auto-Trans.	1		
4122.56	with rubber gasket (Auto-Trans.)	1		
4122.59	with rubber gasket (Auto-Trans.) (Except (USA))	1		
4122.63	Auto-Trans.] Tube with a narrow saw cut [	1		
4122.68	Except Auto-Trans.]	1		
4122.70	JACKET, steering column, assy. ( ) w/o gear change mechanism, w/o rubber gasket nor backing plate (Except Auto-Trans.)	1	1	
4126.05	BUSHING, guide, upper, 19 x 28 x 30 mm.	1	1	
4126.08	BUSHING, guide, upper, 19 x 30 x 19 mm.			1
4127.05	BUSHING, guide, lower	1	1	1
4152.12	GASKET, rubber, steering column jacket ( )	1	1	1
4152.13	GASKET, rubber, steering column jacket ( )	1	1	1
4153.09	PLATE, backing, steering column jacket rubber gasket ( )	1	1	1

(*) → 404:5.014.499,4.529.543,4.564.662;C:4.497.447,4.592.943;L:4.848.168; U6:4.734.433;U6A:1.922.599

Printed in France

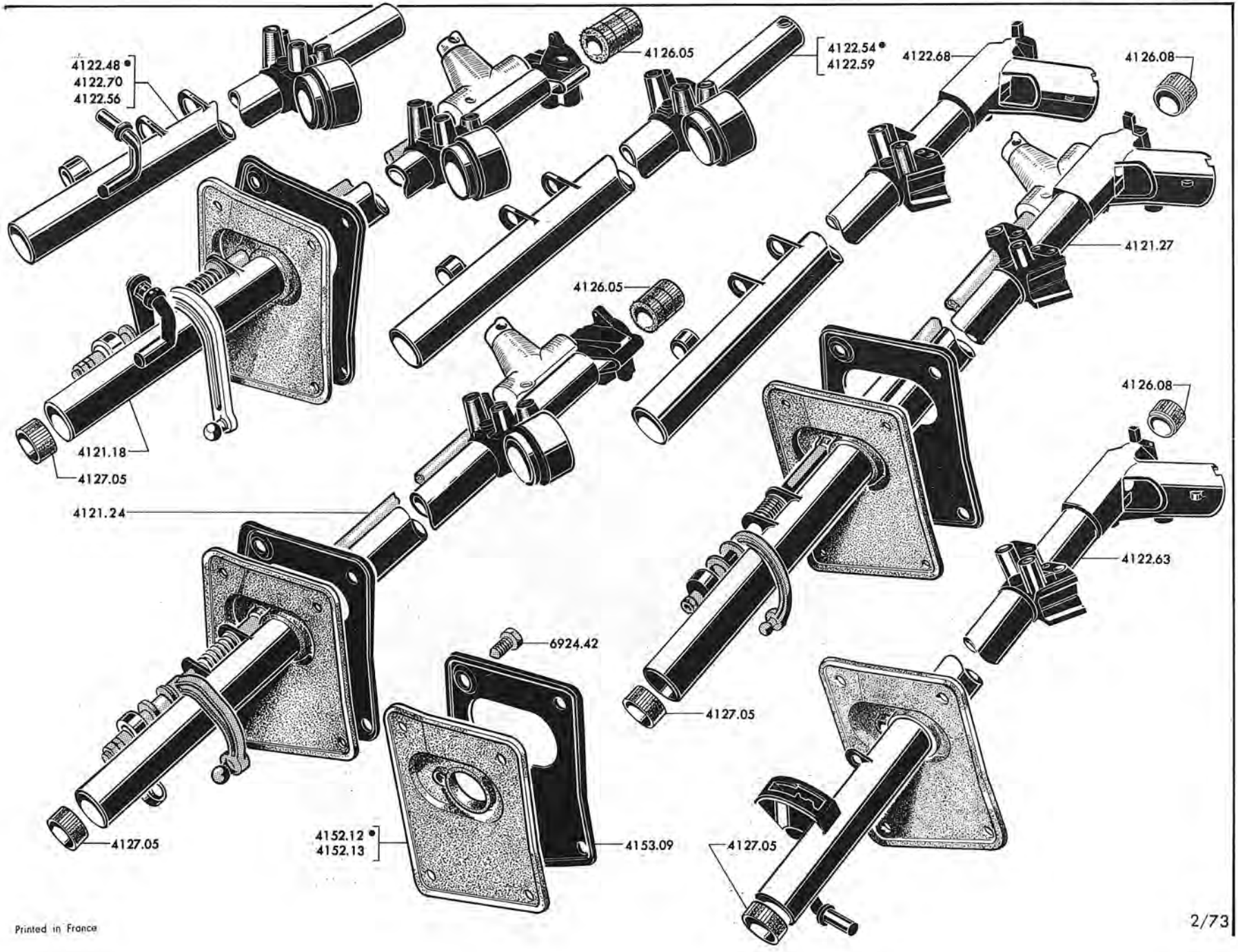

Printed in France

41K - 404

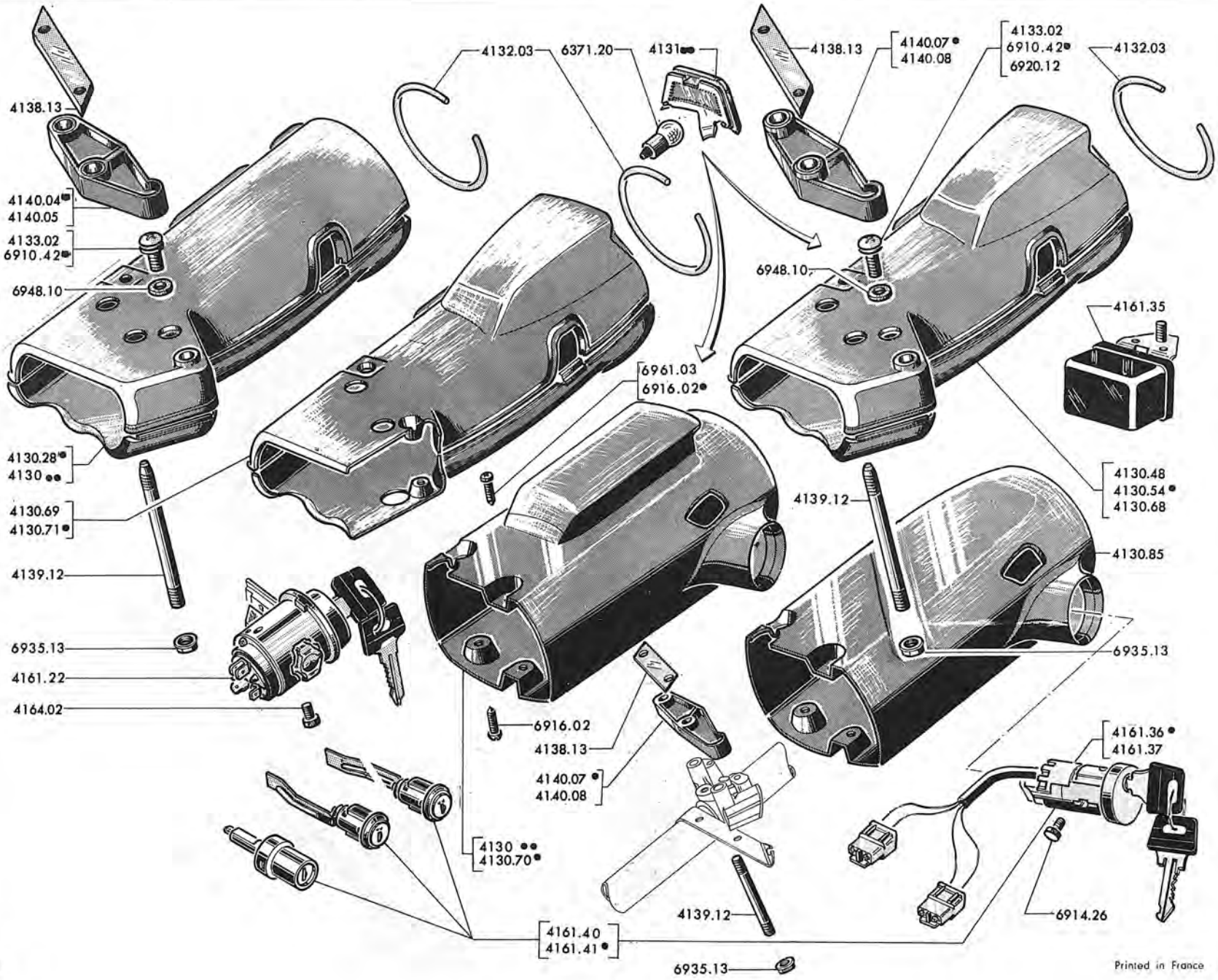

Printed in France

A – ⊢► 404:4.399.083,4.527.033,4.556.165;C:4.497.121,4.592.234;L:4.838.000;U6:4.720.000 and U6A:1.921.000 →⊣ 5.014.499;4.529.543,4.564.662,4.497.447,4.592.943,4.848.168,4.734.433,1.922.599 ..... A

B – ⊢► 404XC5:TW:5.014.499,TH:5.100.000,XC6:TW:5.311.007,TH:5.075.000,4.529.543,8.250.000,4.564.662, A8:1.910.000;C:4.497.447,4.592.943;LXC5:TW:4.848.168,LTH:4.855.000,LXC6:TW:4.940.000;LTH:4.884.000 U6:4.734.434,U6A:1.922.599, 7.100.000 →⊣ 1967 Motor-Show ..... B

C – ⊢► 1967 Motor-Show →⊣ 404XC5:5.073.946;XC6:5.587.988,8.265.378;LXC5:TW:7.160.621;LXC6:TW:4.943.584 LTH:6.869.511;U6:4.790.768;U8:7.023.893;U10:7.137.629; all 404 Injection, (USA) ,C C

D – ⊢► 404XC5:5.073.946;XC6:5.587.988,8.265.378;LXC5:TW:7.160.621,LXC6:TW:4.943.584;LTH:6.869.511; U6:4.790.768;U6S:7.160.000,7.162.000;U8:7.023.893;U10:7.137.629; all 404U7 ..... D

	SHELL, upper and lower, assy. :					
4130.27	«Ivoire 3008» (→⊣ 1965 Motor-Show) (◠)					
4130.28	«Noir» (Except Auto-Trans.) (◠)					
4130.29	«Ivoire 3008» (→⊣ 1965 Motor-Show) (◠)	1	1			
4130.30	«Noir» (Except Auto-Trans.) (◠)					
4130.48	«Noir», with speed range selection indicator lamp holder,					
4130.49	dial and reflector (Auto-Trans.)(◠) (Except (USA))	1				
4130.50	◠ «Noir» (Except Auto-Trans. and (USA)			1		
4130.51	◠			1	1	
4130.54	◠ «Noir» (Auto-Trans.) (Except (USA))			1		
4130.68	◠ «Noir» ((USA) Auto-Trans.)	1	1			
4130.69	◠ «Noir» ((USA) and U6A Auto-Trans. →⊣ 8.354.750,7.101.794)			1		
4130.70	◠ «Noir» (Auto-Trans.)					1
4130.71	◠ «Noir» ((USA) and U6A Auto-Trans. ⊢► 8.354.750,7.101.794)			1		
4130.85	◠ «Noir» (Except Auto-Trans.)					1
4130.87	◠ «Noir» (Auto-Trans. →⊣ 404:8.266.802)			1	1	
4130.88	◠ «Noir» (Auto-Trans. ⊢► 404:8.266.802)					1
	GLASS, speed range selection indicator :					
4131.04	◠ (Auto-Trans.) (Except (USA))	1	1	1		
4131.05	◠ (USA) Auto-Trans.)	1	1			
4131.06	◠ (USA) and U6A Auto-trans. →⊣ 8.354.750,7.101.794)			1		
4131.08	◠ (USA) and U6A Auto-Trans. ⊢► 8.354.750,7.101.794			1		
4132.03	HOOP, anchor	1	1	1		
4133.02	SCREW, 4 x 12 mm., cross-recessed head, cone point	5				
4138.13	BRACKET	1	1	1	1	
4139.12	STUD, 7 x 12 x 91 mm.	2	2	2	2	
4140.04	SPACER, «Noir»	1	1			
4140.05	SPACER, «Ivoire 3008» (→⊣ 1965 Motor-Show)	1	1			
4140.07	SPACER, «Noir» (◠)			1	1	
4140.08	SPACER, «Noir» (◠)			1	1	
4161.35	BUZZER, ignition key oversight warning ((USA))					1
	LOCK, ignition and steering (with 2 keys) :					
4161.22	(fit 1 terminal 6540.14 →⊣ 404XC5TW:5.070.000;TH:5.307.700,8.251.300,8.224.862; A8:1.910.357;C:4.499.500,4.599.271;LXC5TW:4.898.900;LTH:4.882.100;U6:4.763.170; U6A:1.928.100 and all 404XC6,Coupler, LXC6,404/8,U8,U10	1	1	1	1	
	– 404 (USA) and U6A (USA)		1			
4161.36	Except (USA) ◠					1
4161.37	(USA)					1
4161.40	with doors lock-barrels (◠)					1
4161.41	with doors and rear trunk lock-barrels (◠) (Sedan)					1
4164.02	SCREW, hex-head, 3.5 x 6.5 mm., ignition and steering lock fixing	1	1	1	1	
6371.20	BULB, bayonet-lock, BA-9S, 1 fil, 12V/2W., speed range selector dial lighting (Auto-Trans.)		1	1	1	

A – →| 1963 Motor-Show
B – |→ 1963 Motor-Show →| 404DA:3.060.687;D:4.603.006;LD:4.978.509;U6D:4.907.289
C – |→ 404D:4.603.006;LD:4.978.509;U6D:4.907.289 →| 1967 Motor-Show
D – |→ 1967 Motor-Show →| 404D:4.663.905;LD:4.995.987;U6D:4.928.032;U8D:7.052.749;U10D:7.087.073
E – |→ 404D:4.663.905;LD:4.995.987;U6D:4.928.032;U8D:7.052.749;U10D:7.087.073; all 404U7D

		A	B	C	D	E
	JACKET, steering column, assy. (◠), w/o gear change mechanism, w/o rubber gasket nor backing plate :					
4122.50	fit 1 lever 2435.16, 2 bushings 2439.04, 1 washer 6946.13, 1 cotter pin 6969.20 →| 404D:4.619.178;LD:4.983.839;U6D:4.914.267; moreover fit 4 screws 6910.42 for columns «A» and «B»	1	1	1		
4122.55					1	
4122.74	(with a saw cut) (fit 1 lever 1680.22,1 rod 1684.09, then affix a strip 8436.04 on the lever supporting lug →| 404D:7.181.007;LD:7.223.197;U6D:4.934.897; U7D:7.380.575;U8D:7.402.055;U10D:7.095.594					1
4126.05	BUSHING, guide, upper, 19 x 28 x 30 mm.	1	1	1	1	
4126.08	BUSHING, guide, upper, 19 x 30 x 19 mm.					1
4127.05	BUSHING, guide, lower	1	1	1	1	1
	SHELL, upper and lower, assy. :					
4130.31	«Ivoire 3008» ◠ →| 1965 Motor-Show					
4130.32	«Noir» ◠					
4130.33	«Ivoire 3008» ◠ →| 1965 Motor-Show	1	1	1		
4130.34	«Noir» ◠					
4130.52	«Noir» ◠				1	
4130.53	«Noir» ◠				1	1
4130.85	«Noir» ◠					1
4132.03	HOOP, anchor	1	1	1	1	
4133.02	SCREW, 4 x 12 mm., cross-recessed head, cone point	5	5			
4138.13	BRACKET	1	1	1	1	1
4139.12	STUD, 7 x 12 x 91 mm.	2	2	2	2	2
	SPACER, steering column jacket :					
4140.04	«Noir»	1	1	1		
4140.05	«Ivoire 3008» →| 1965 Motor-Show					
4140.07	«Noir» ◠				1	1
4140.08	«Noir» ◠				1	1
	GASKET, rubber :					
4152.10	◠					
4152.11	◠	1				
4152.12	◠					
4152.13	◠		1	1	1	1
4153.08	PLATE, backing ◠	1				
4153.09	PLATE, backing ◠		1	1	1	1
	LOCK, steering, with 2 keys :					
4161.11	◠ automatic return type (fit 1 terminal 6540.14 →| 404D:4.619.852;	1	1	1	1	
4161.12	◠ LD:4.984.110;U6D:4.914.547	1	1	1	1	
4161.38						1
4164.02	SCREW, 3.5 x 6.5 mm., steering lock fixing	1	1	1	1	

Printed in France

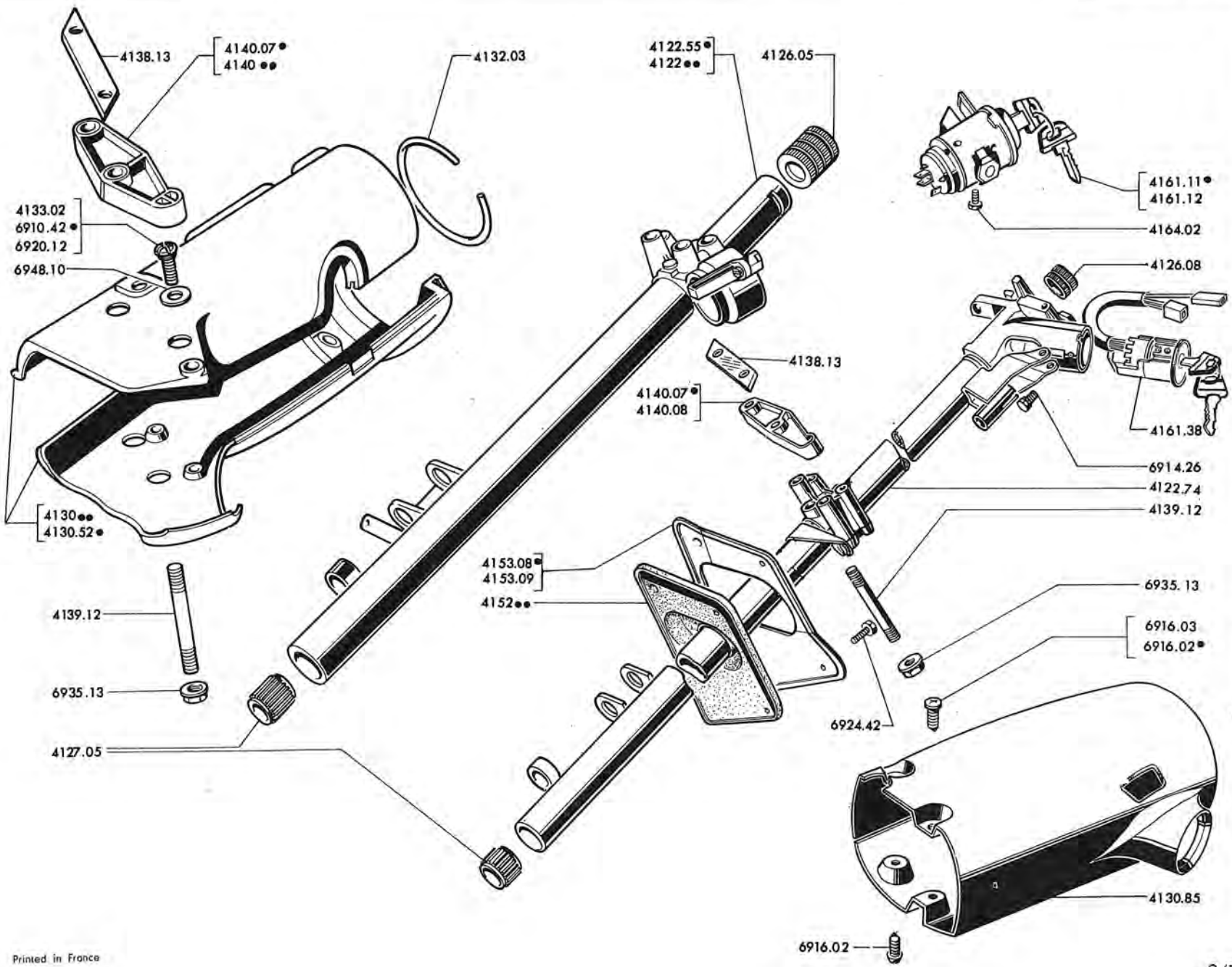

Printed in France

BRAKES

(Drum and Disc Types)

FRONT BRAKES

NON ASSISTED : Drum Type

2/73	42.A	Sedan
4/71	42.B	
4/71	42.C	Sedan (Cont'd); Cabriolet and Coupé
4/71	42.D	
4/71	42.E	Family Car, Station-Wagon
4/71	42.F	
4/71	42.G	Station-Wagon (Cont'd); Light Lorry
4/71	42.H	

ASSISTED : Drum Type

4/71	42. I	Sedan, Cabriolet and Coupé
4/71	42. J	
4/71	42.K	Family Car, Station-Wagon
4/71	42.L	

ASSISTED : Disc Type

4/71	42.M	Sedan
4/71	42.N	
4/71	42.O	Sedan (Cont'd)
4/71	42.P	

REAR BRAKES

NON ASSISTED : Drum Type

4/71	42.Q	Sedan
4/71	42.R	
4/71	42.S	Sedan (Cont'd); Cabriolet and Coupé
2/73	42.T	
2/73	42.U	Family Car, Station-Wagon
4/71	42.V	
4/71	42.W	Station-Wagon (Cont'd); Light Lorry
2/73	42.X	

ASSISTED : Drum Type

2/73	42.Y	Sedan
4/71	42.Z	
4/71	42.AA	Sedan (Cont'd)
2/73	42.AB	
2/73	42.AC	Family Car; Station-Wagon
2/73	42.AD	

Printed in France

BRAKE PLATES, SHOES, AND DRUMS

Sedan

Brake Diameter (mm.)	255			255			255			280		
Lining Size (mm.)	267 x 50 x 5			267 x 60 x 5			267 x 60 x 5			280 x 65 x 5		
404 XC5 TW → / →	4.000.000 1960 M.S. 4.108.664		QTY. REQ.	4.108.664 4.315.776		QTY. REQ.	4.315.776 4.388.565		QTY. REQ.	4.388.565 5.072.600 1968 M.S.		QTY. REQ.
404 Coupler TW → / →	4.500.000 4.504.085			4.504.085 4.525.791			4.525.791 4.526.883			4.526.883 4.530.014 End of Prod.		
404 (USA) (Std. Trans.) → / →	4.000.000 4.108.664			4.108.664 4.315.776			4.315.776 4.388.565			4.388.565 5.100.000 1965 M.S.		
	Exchange	New		Exchange	New		Exchange	New		Exchange	New	
PLATE, brake :												
- ◀		4209.28 *	1		4209.29	1		4209.29	1		4209.31	1
- ◀		4210.19 *	1		4210.20	1		4210.20	1		4210.22	1
CUP, oil thrower		4221.17	2		4221.17	2		4221.17	2		4221.17	2
SHOE, brake - with lining	4235.30	4235.19	4	4235.34	4235.26	4	4235.34	4235.26	4	4235.35	4235.27	4
- oversize 0.5 mm.		4235.95	4		4235.97	4		4235.97	4			
LINING- 4Z		4239.13	4		4239.18	4		4239.18	4		4239.19	4
- oversize 0.5 mm		4239.32	4		4239.34	4		4239.34	4		4239.35	4
RIVET, brass, 3.75 x 7 mm.		4243.03	-		4243.03	-		4243.03	-		4243.03	-
SET of 4 Linings, with rivets		4245.21	1		4245.29	1		4245.29	1		4245.26	1
DRUM		4246.28	2		4246.29	2		4246.33	2		4246.35	2

* - Use with oil thrower cup 4221.17 → 404:4.000.510

Printed in France

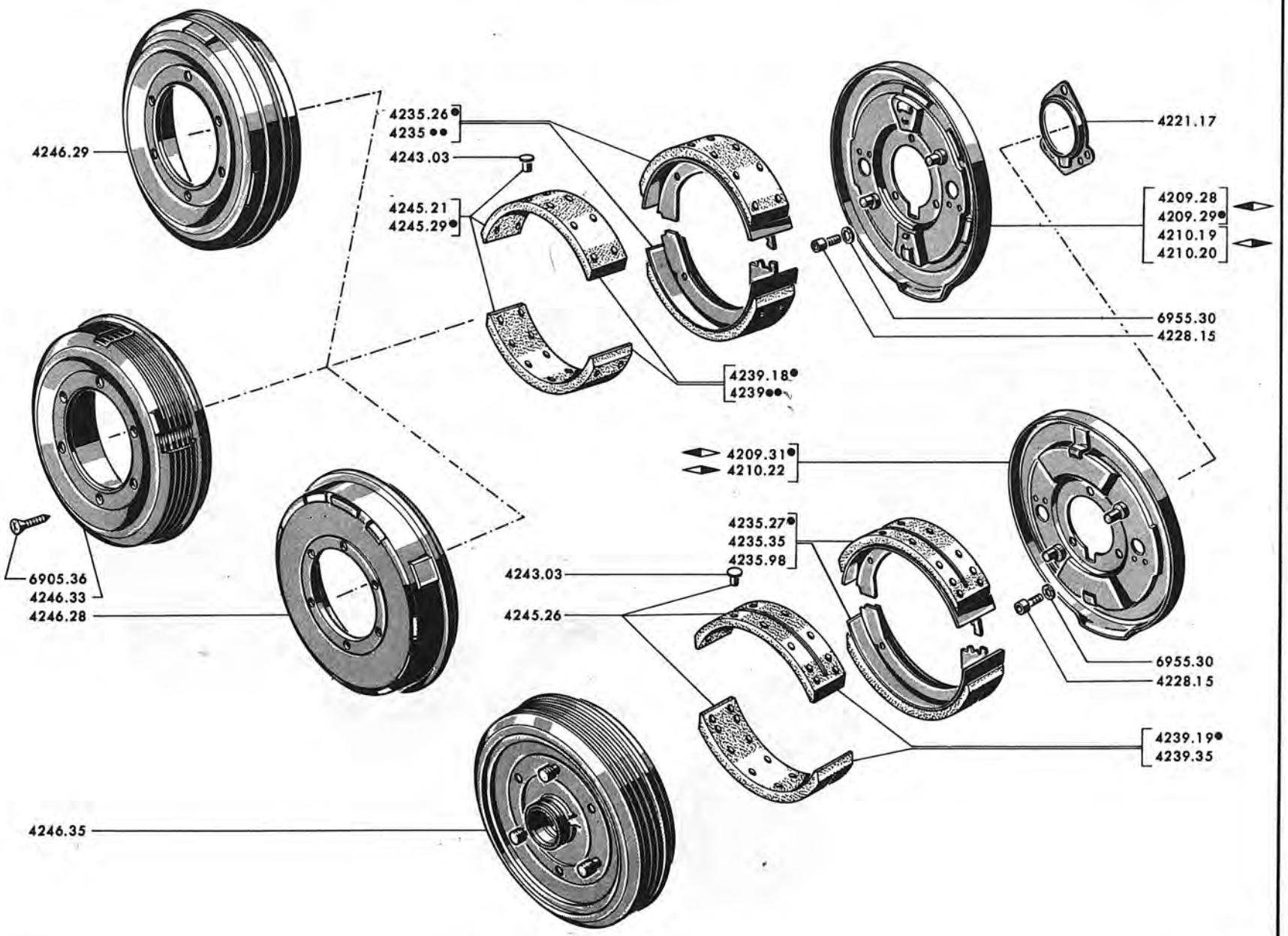
4246.29
4235.26●
4235 ●●
4243.03
4245.21
4245.29●
4239.18●
4239●●
4221.17
4209.28
4209.29●
4210.19
4210.20
6955.30
4228.15
6905.36
4246.33
4246.28
4209.31●
4210.22
4235.27●
4235.35
4235.98
4243.03
4245.26
6955.30
4228.15
4239.19●
4239.35
4246.35

42C - 404

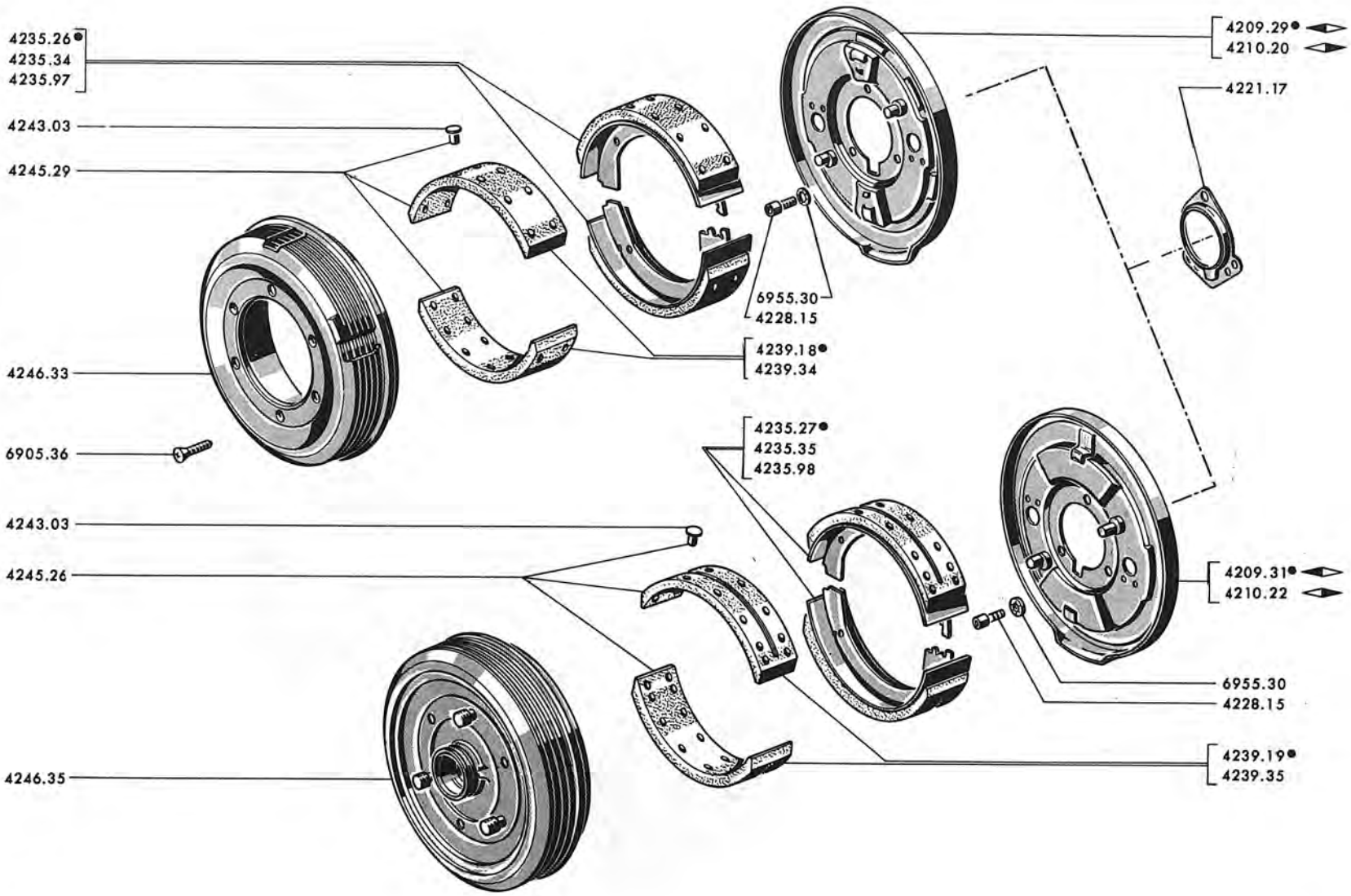

Printed in France

BRAKE PLATES, SHOES, AND DRUMS

Sedan (Cont'd); Cabriolet and Coupé

Brake Diameter (mm.)	255			280			280				280		
Lining Size (mm.)	267 x 60 x 5			280 x 65 x 5			280 x 65 x 5				280 x 65 x 5		
404 DA	3.060.000 3.060.542		QTY. REQ.	3.060.542 3.060.687 End of Prod.		QTY. REQ.			QTY. REQ.	404 XC6 TW	5.075.000 5.095.600 1968 M.S.		QTY. REQ.
404 D				4.600.000 4.670.000			7.165.000			404 A8	1.910.000 1.910.100		
404 Injection				4.550.000 4.570.000 1964 M.S.						404/8	6.980.000 6.980.300 1968 M.S.		
404 C Injection				4.590.000 4.594.000 1964 M.S.						404 C Carburettor	4.495.000 4.498.000 1964 M.S.		
	Exchange	New		Exchange	New		Exchange	New			Exchange	New	
PLATE, brake :													
- ◀		4209.29	1		4209.31	1		4209.31	1			4209.31	1
- ◀		4210.20	1		4210.22	1		4210.22	1			4210.22	1
CUP, oil thrower		4221.17	2		4221.17	2		4221.17	2			4221.17	2
SCREW hex-socket head, 10 x 25.5 mm.		4228.15	6		4228.15	6		4228.15	6	(Except 404/8)		4228.15	6
SHOE, brake, with lining	4235.34	4235.26	4	4235.35	4235.27	4	4235.35	4235.27	4		4235.35	4235.27	4
- oversize 0.5 mm.		4235.97	4		4235.98	4		4235.98	4			4235.98	4
LINING - 4 Z		4239.18	4		4239.19	4		4239.19	4			4239.19	4
- oversize 0.5 mm.		4239.34	4		4239.35	4		4239.35	4			4239.35	4
RIVET, brass, 4 x 8 mm.		4243.03	-		4243.03	-		4243.03	-			4243.03	-
SET of 4 LININGS, with rivets		4245.29	1		4245.26	1		4245.26	1			4245.26	1
DRUM		4246.33	2		4246.35	2		4246.35	2			4246.35	2

BRAKE PLATES, SHOES, AND DRUMS

Family Car, Station-Wagon

Brake Diameter (mm.)	280				280		
Lining Size (mm.)	280 x 65 x 5				280 x 65 x 5		
404 LXC5 TW	4.825.000 4.900.000 7.000.000 7.001.184 1970 Motor-Show		QTY. REQ.	404 LXC7 TW	4.944.200		QTY. REQ.
404 LXC6 TW	4.940.000 4.943.963 1970 Motor-Show			404 LD	4.975.000		
404 U6	4.700.000 4.793.553 1970 Motor-Show			404 U6B	7.240.000		
				404 U6D	4.900.000		
	Exchange	New			Exchange	New	
PLATE, brake :							
- ◀▶		4209.31	1			4209.31	1
- ◀▶		4210.22	1			4210.22	1
CUP, oil thrower		4221.17	2			4221.17	2
SCREW, hex-socket head, 10 x 25.5 mm.		4228.15	6			4228.15	6
SHOE, brake, with lining	4235.35	4235.27	4		4235.35	4235.27	4
- oversize 0.5 mm.		4235.98	4			4235.98	4
LINING - 4Z -		4239.19	4			4239.19	4
- oversize 0.5 mm.		4239.35	4			4239.35	4
RIVET, brass, 4 x 8 mm.		4243.03	-			4243.03	-
SET of 4 LININGS, with rivets		4245.26	1			4245.26	1
DRUM		4246.31	2			4246.31	2

Printed in France

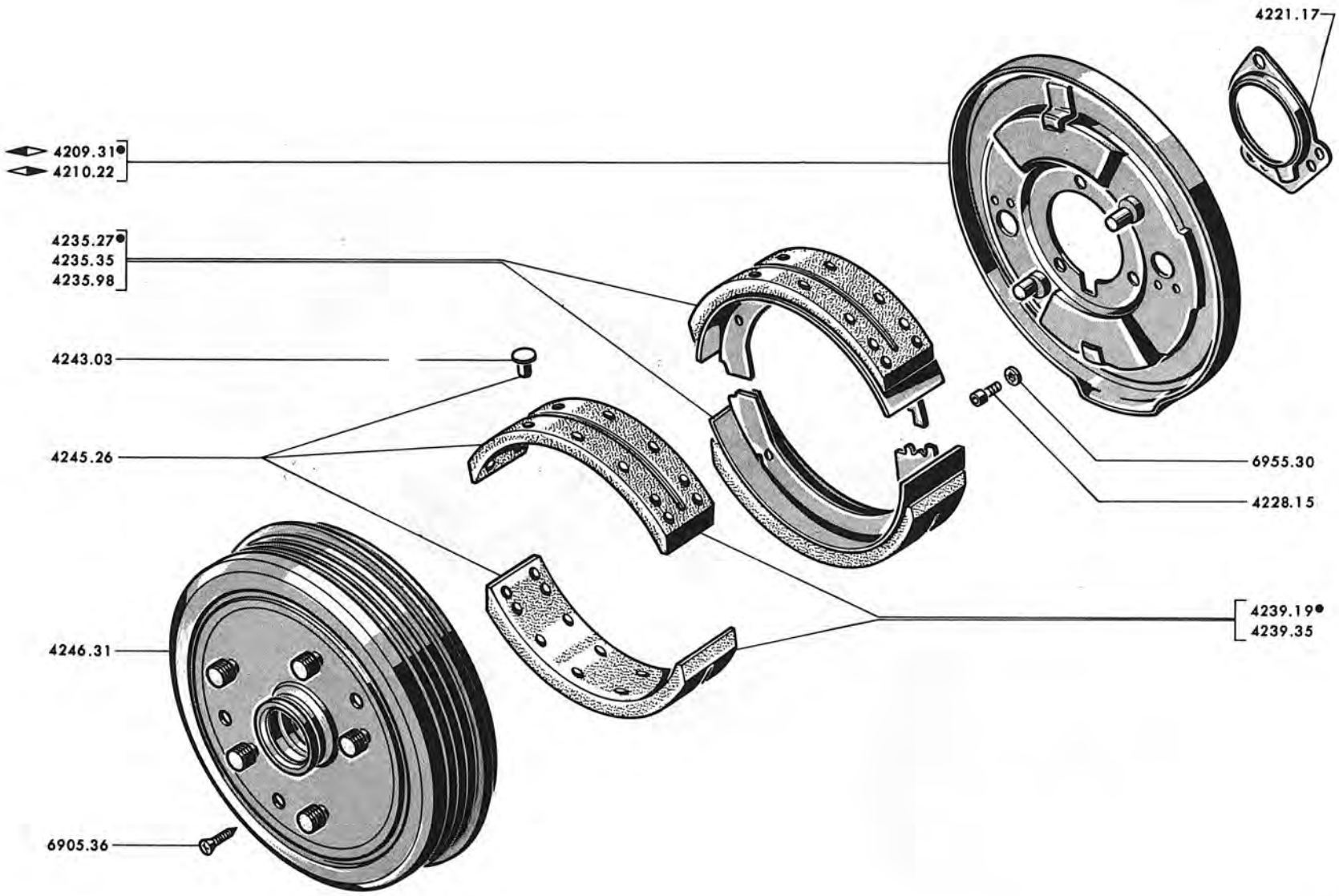
4221.17
4209.31●
4210.22
4235.27●
4235.35
4235.98
4243.03
4245.26
6955.30
4228.15
4239.19●
4239.35
4246.31
6905.36

42G - 404

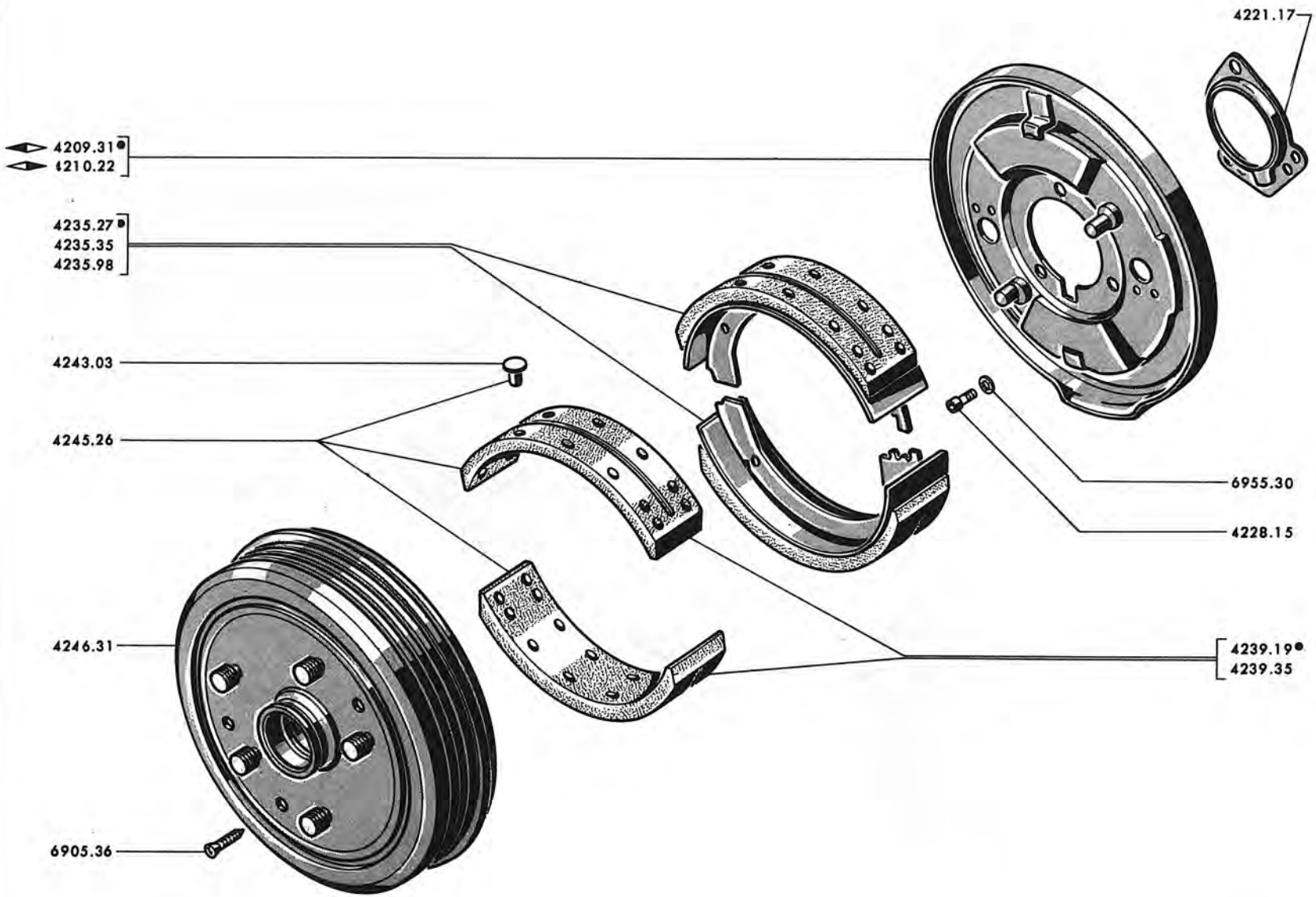

Printed in France

BRAKE PLATES, SHOES, AND DRUMS

Station-Wagon (Cont'd); Light Lorry

Brake Diameter (mm.)	280			280				280		
Lining Size (mm.)	280 x 65 x 5			280 x 65 x 5				280 x 65 x 5		
404 U6A (USA)	1.920.000 1.925.000		QTY. REQ.	1.932.300 1.938.216 End of Prod.		QTY. REQ.	404 U6S	7.160.000 7.160.746 End of Prod.		QTY. REQ.
404 U6A (Except (USA))	1.920.000 1.925.000						404 U6S (Auto-Trans.)	7.162.000 7.162.736 End of Prod.		
404 U6A (USA) (Auto-Trans.)	7.100.100 7.102.000			7.102.000 7.102.015 End of Prod.			404 U8D	7.040.000		
404 U8	7.010.000 7.026.185 1970 Motor-Show						404 U10	7.060.000		
404 U8A				7.270.000 1970 Motor-Show			404 U10D	7.080.000		
	Exchange	New		Exchange	New			Exchange	New	
PLATE, brake :										
- ◁		4209.31	1		4209.31	1			4209.31	1
- ◀		4210.22	1		4210.22	1			4210.22	1
CUP, oil thrower		4221.17	2		4221.17	2			4221.17	2
SCREW, hex-socket head, 10 x 25.5 mm.		4228.15	6		4228.15	6			4228.15	6
SHOE, brake, with lining	4235.35	4235.27	4	4235.35	4235.27	4		4235.35	4235.27	4
- oversize 0.5 mm.		4235.98	4		4235.98	4			4235.98	4
LINING -4Z-		4239.19	4		4239.19	4			4239.19	4
- oversize 0.5 mm.		4239.35	4		4239.35	4			4239.35	4
RIVET, brass, 4 x 8 mm.		4243.03	-		4243.03	-			4243.03	-
SET of 4 LININGS, with rivets		4245.26	1		4245.26	1			4245.26	1
DRUM		4246.31	2		4246.31	2			4246.31	2

BRAKE PLATES, SHOES, AND DRUMS

Sedan, Cabriolet and Coupé

Brake Diameter (mm.)	280				280			
Lining Size (mm.)	298 x 65 x 7				298 x 65 x 7			
404XC5 TH →	5.100.000				404 XC6 TH →	5.311.007		
→	5.309.500 1968 Motor-Show				→	5.504.800 1968 Motor-Show		
404 Coupler TH →	4.535.000				404 (USA) (Std. Trans.) →	5.100.000		
→	4.537.191 End of Production				→	5.415.000 1967 Motor-Show		
404 Injection →	4.570.000				404 (USA) (Auto-Trans.) →	8.250.000		
→	4.590.000				→	8.256.600 1967 Motor-Show		
→	8.200.000				404 (Auto-Trans.) →	8.250.000		
→	8.303.300 End of Production				→	8.259.900 1968 Motor-Show		
404 C Carburettor →	4.498.000 1964 Motor-Show				404 A/8 →	1.910.100		
→	4.671.100 End of Production				→	1.910.525 End of Production		
404 C Injection →	4.594.000 1964 Motor-Show							
→	6.803.500 End of Production							
	Exchange	New	QTY. REQ.			Exchange	New	QTY. REQ.
PLATE, brake :								
- ◀▶		4209.33	1				4209.33	1
- ◀▶		4210.24	1				4210.24	1
CUP, oil thrower		4221.17	2				4221.17	2
SCREW, hex-socket head, 10 x 25.5 mm.		4228.15	6				4228.15	6
SHOE, brake, with lining :								
- ◀▶ (◁ a + b)	4235.90	4235.89	2			4235.90	4235.89	2
- ◀▶ (◁ a + b)	4235.93	4235.92	2			4235.93	4235.92	2
LINING		4239.25	4				4239.25	4
RIVET, brass, 4 x 8 mm.		4243.03	-				4243.03	-
SET of 4 LININGS, with rivets		4245.27	1				4245.27	1
DRUM		4246.35	2				4246.35	2

a - fit pull-off spring 4375.21/4375.22 → 404XC5:5.307.921; XC6:5.352.374, 8.253.714, 8.234.142; (USA):8.253.714; C:4.499.762, 6.800.236

b - change simultaneously 2 shoes 4235.89 ◀▶ and 4235.92 ◀▶ → 404XC5:5.247.918, 4.536.857, 8.210.395; C:4.499.019; 4.597.974; all 404 A8

Printed in France

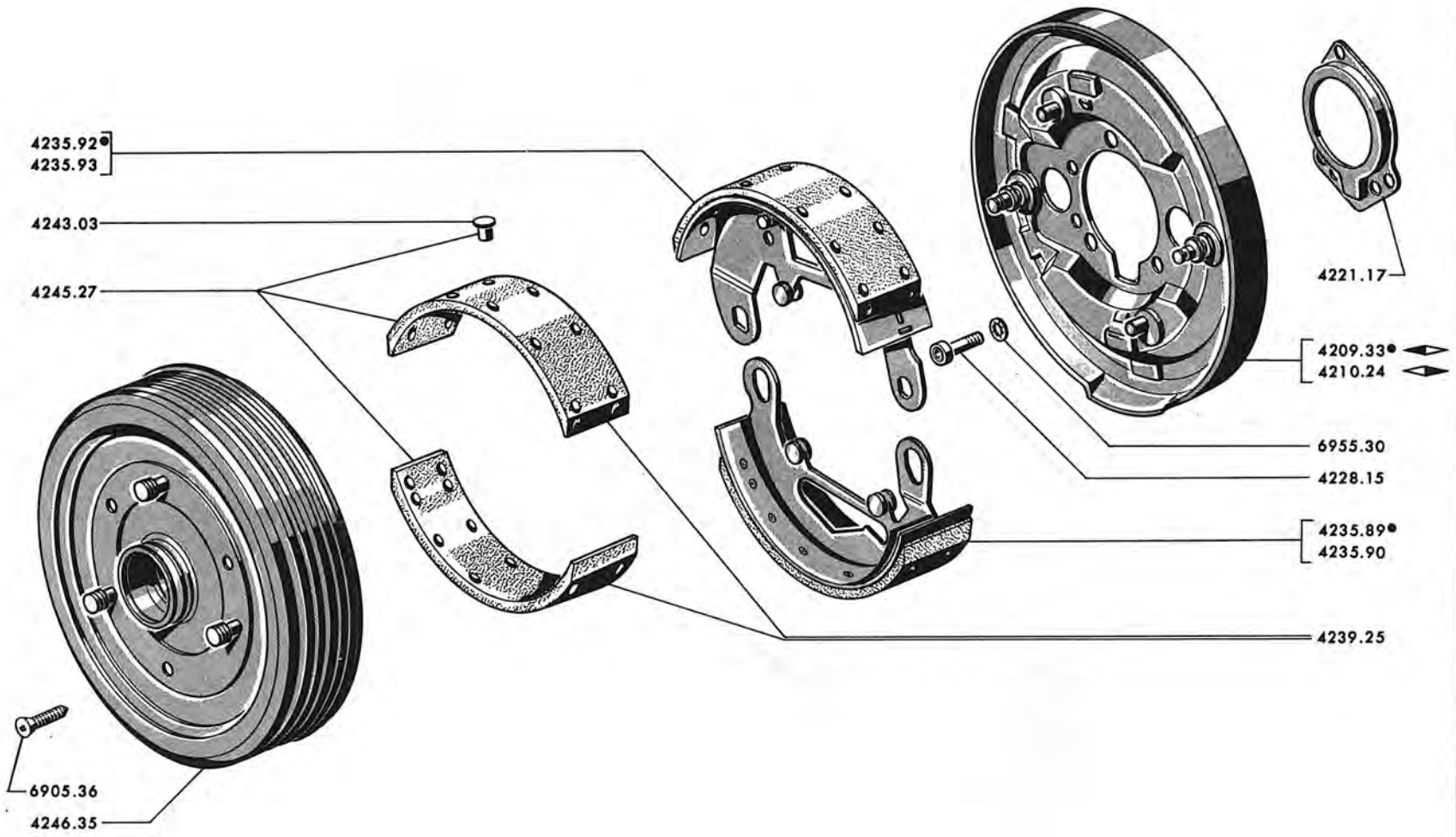

Printed in France

42K - 404

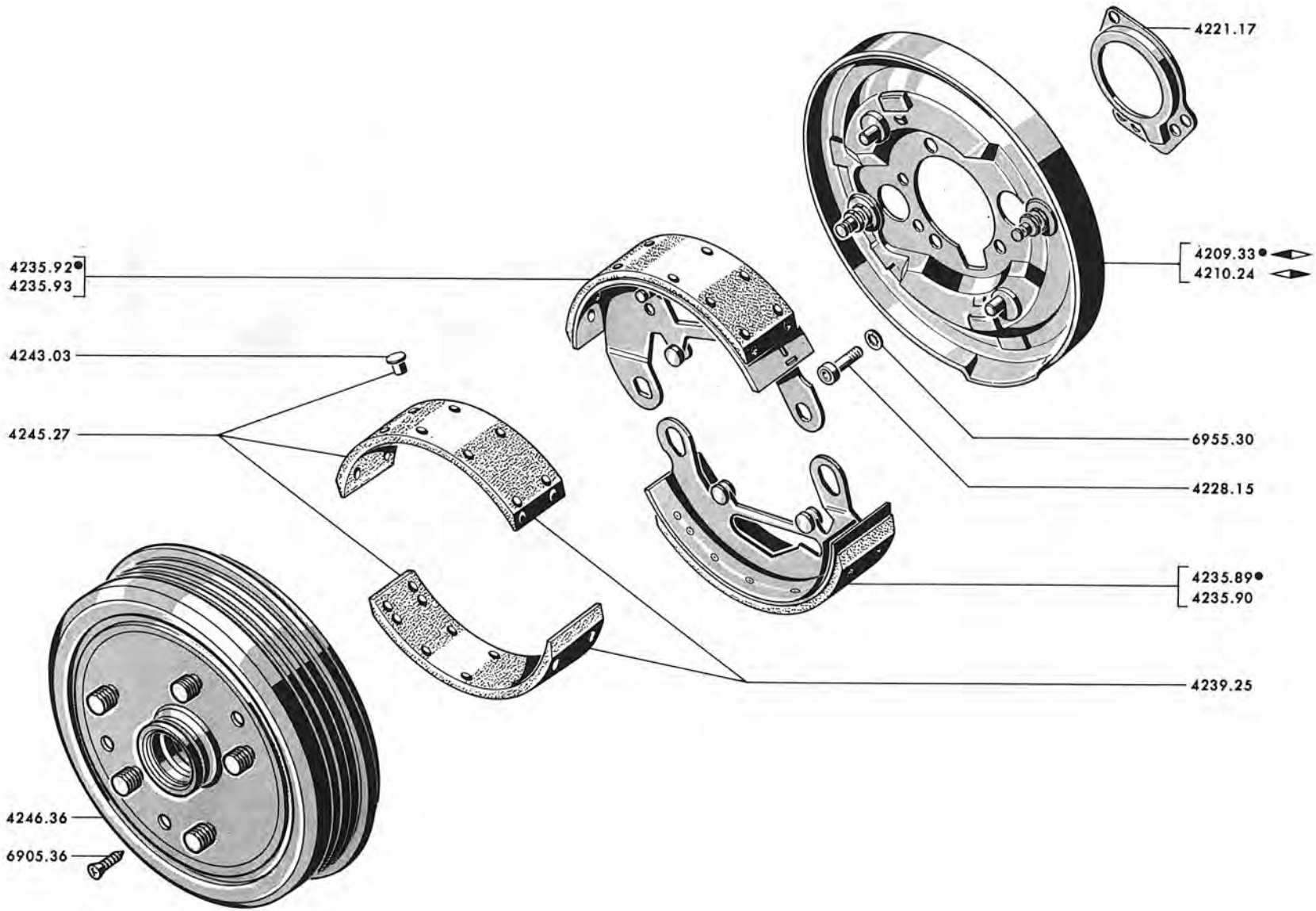

Printed in France

BRAKE PLATES, SHOES, AND DRUMS

Family Car, Station-Wagon

Brake Diameter (mm.)	280		
Lining Size (mm.)	298 x 65 x 7		
404 LXC5 TH	4.855.000 4.884.000 7.120.000 7.120.994 1970 Motor-Show		QTY. REQ.
404 LXC6 TH	4.884.000 4.895.000 6.820.000 6.878.721 1970 Motor-Show		
404 LXC7 TH	6.879.500 1970 Motor-Show		
404 U6A (USA)	1.925.000 1.932.300 1967 Motor-Show		
404 U6A (Except (USA))	1.925.000 1.938.216 End of Production		
404 U6A (USA) (Auto-Trans.)	7.100.000 7.100.100		
404 U6A (Auto-Trans.) (Except (USA))	7.100.000 7.102.015 End of Production		
	Exchange	New	
PLATE, brake :			
- ◀▶		4209.33	1
- ◀▶		4210.24	1
CUP, oil thrower		4221.17	2
SCREW, hex-socket head, 10 x 25.5 mm.		4228.15	6
SHOE, with lining :			
- ◀▶ (a + b)	4235.90	4235.89	2
- ◀▶ (a + b)	4235.93	4235.92	2
LINING		4239.25	4
RIVET, brass, 4 x 8 mm.		4243.03	-
SET of 4 LININGS, with rivets		4245.27	1
DRUM		4246.36	2

a – fit pull-off springs 4375.21/4375.22 →| 404LXC5:4.882.273; LXC6:4.980.725; U6A:1.929.137

b – change simultaneously 2 shoes 4235.89 ◀▶ and 4235.92 ◀▶ →| 404LXC5:4.872.767; U6A:1.927.009

Printed in France

4/71

SPLASH SHIELDS, CALIPER SUPPORTS, BRAKE DISCS

Sedan

			QTY. REQ.			QTY. REQ.			QTY. REQ.
404 (USA) (Std. Trans.)	8.325.000 1967 Motor-Show 8.327.500 1968 Motor-Show			8.350.000 8.351.577			8.351.577 8.352.345 End of Production		
404 (USA) (Auto-Trans.)	8.327.500 1967 Motor-Show 8.352.700 1968 Motor-Show			8.352.700 8.354.248			8.354.248 8.355.340 End of Production		
404/8	6.900.000 1967 Motor-Show 6.906.200 1968 Motor-Show								
	Exchange	New		Exchange	New		Exchange	New	
SHIELD, splash, brake disc :									
- ◀▶		4209.38	1						
- ◀▶		4209.39	1						
PROTECTOR, grease nipple					4209.48	2		4209.48	2
SHIELD, splash, brake disc					4209.47	2		4209.49	2
SUPPORT, brake caliper :									
- ◀▶		4220.07	1						
- ◀▶		4220.08	1						
-					4220.10	2		4220.10	2
SCREW, 10 x 31 mm.		4228.17	6						
SCREW, 10 x 34 mm.					4228.20	6		4228.20	6
PIN, brake pad retaining, 6.3 x 67 mm.		4243.07	4						
PIN, brake pad retaining, 5 x 69 mm.					4243.13	4		4243.13	4
CLIP, brake pad retaining pin		4244.01	4		4244.05	4		4244.05	4
SPRING, anti-vibration					4244.06	2		4244.06	2
KIT (brake pad-4 pieces)		4245.35	1		4245.39	1		4245.39	1
DISC, brake		4246.41	2		4246.46	2		4246.46	2
SCREW, hex-socket head, 10 x 30 mm.		4249.01	6		4249.01	6		4249.01	6

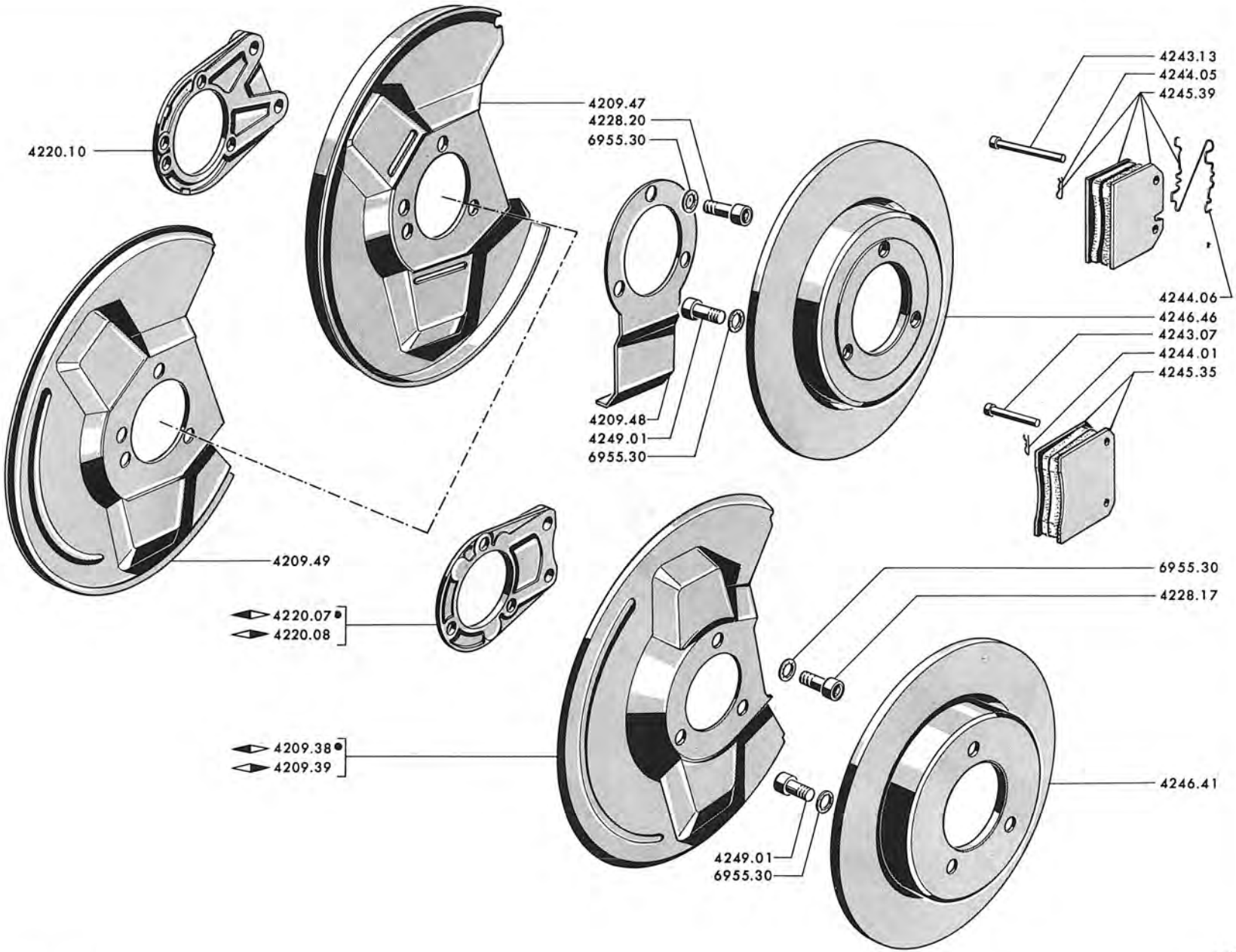

Printed in France

420 - 404

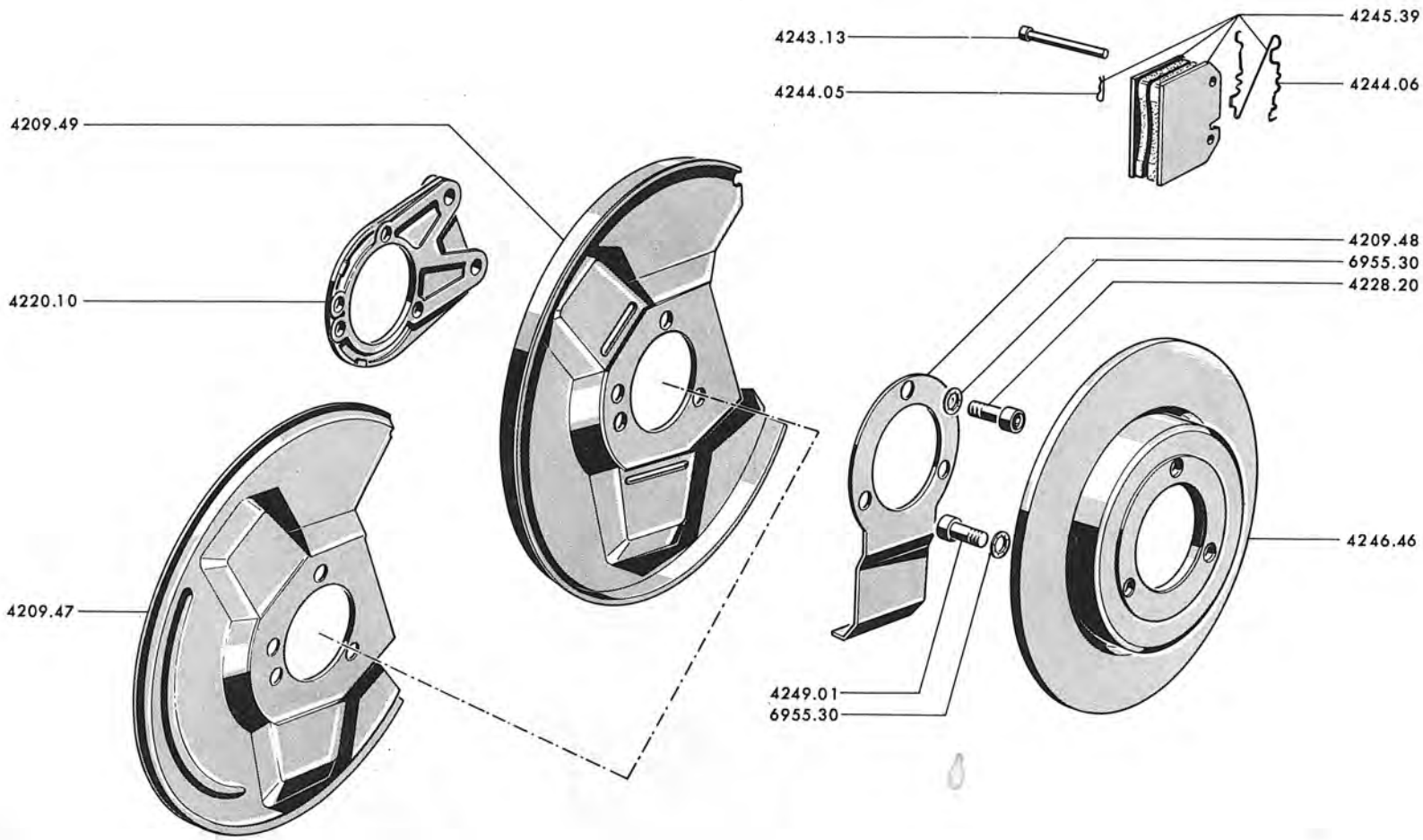

Printed in France

SPLASH SHIELDS, CALIPER SUPPORTS, DISCS

Sedan (Cont'd)

			QTY. REQ.			QTY. REQ.
404 XC5	5.072.600 1968 Motor-Show 5.073.200			5.073.200 5.074.251 1970 Motor-Show		
404 XC6	5.504.800 1968 Motor-Show 5.543.989			5.543.989 5.610.412 1970 Motor-Show		
404 XC7				5.612.500 1970 Motor-Show		
404 (Auto-Trans.)	8.259.900 1968 Motor-Show 8.262.637			8.262.637		
404/8 and	6.906.200 1968 Motor-Show 6.908.292			6.908.292 6.909.676 End of Production		
	Exchange	New		Exchange	New	
PROTECTOR, grease nipple		4209.48	2		4209.48	2
SHIELD, splash, brake disc		4209.47	2		4209.49	2
SUPPORT, brake caliper		4220.10	2		4220.10	2
SCREW, hex-socket, head, 10 x 34 mm.		4228.20	6		4228.20	6
PIN, brake pad retaining, 5 x 69 mm.		4243.13	4		4243.13	4
CLIP, brake pad retaining pin		4244.05	4		4244.05	4
SPRING, anti-vibration		4244.06	2		4244.06	2
KIT (brake pad-4 pieces)		4245.39	1		4245.39	1
DISC, brake		4246.46	2		4246.46	2
SCREW, hex-socket head, 10 x 30 mm.		4249.01	6		4249.01	6

BRAKE PLATES, SHOES, AND DRUMS

Sedan

Brake Diameter (mm.)	255			255		
Lining Size (mm.)	267 x 35 x 5 (leading) 219 x 35 x 5 (trailing)			267 x 45 x 5 (leading) 219 x 45 x 5 (trailing)		
404 XC5 TW →	4.000.000 5.057.592		QTY. REQ.	5.057.592 5.072.600 1968 Motor-Show		QTY. REQ.
404 Coupler TW →	4.500.000 4.530.000			4.530.000 4.530.014 End of Production		
404 (USA) (Std. Trans.) →	4.000.000 5.100.000 1965 Motor-Show					
	Exchange	New		Exchange	New	
PLATE, brake :						
- ◀		4211.17	1		4211.22	1
- ◀		4212.16	1		4212.22	1
GASKET, paper (◀ ★)		4222.06	4		4222.06	4
SHOE, with lining :						
- leading	4235.33	4235.23	2	4235.81	4235.80	2
- trailing	4236.29	4236.24	2	4236.50	4236.49	2
LINING - 4Z - :						
- leading shoe		4239.11	2		4239.31	2
- trailing shoe		4240.16	2		4240.26	2
RIVET, brass, 4 x 8 mm.		4243.03	-		4243.03	-
SET of 4 LININGS, with rivets		4245.19	1		4245.28	1
DRUM		4246.15	2		4247.10	2

(★) Use with 2 washers 3337.01 → 404:4.445.195, 4.528.631

Printed in France

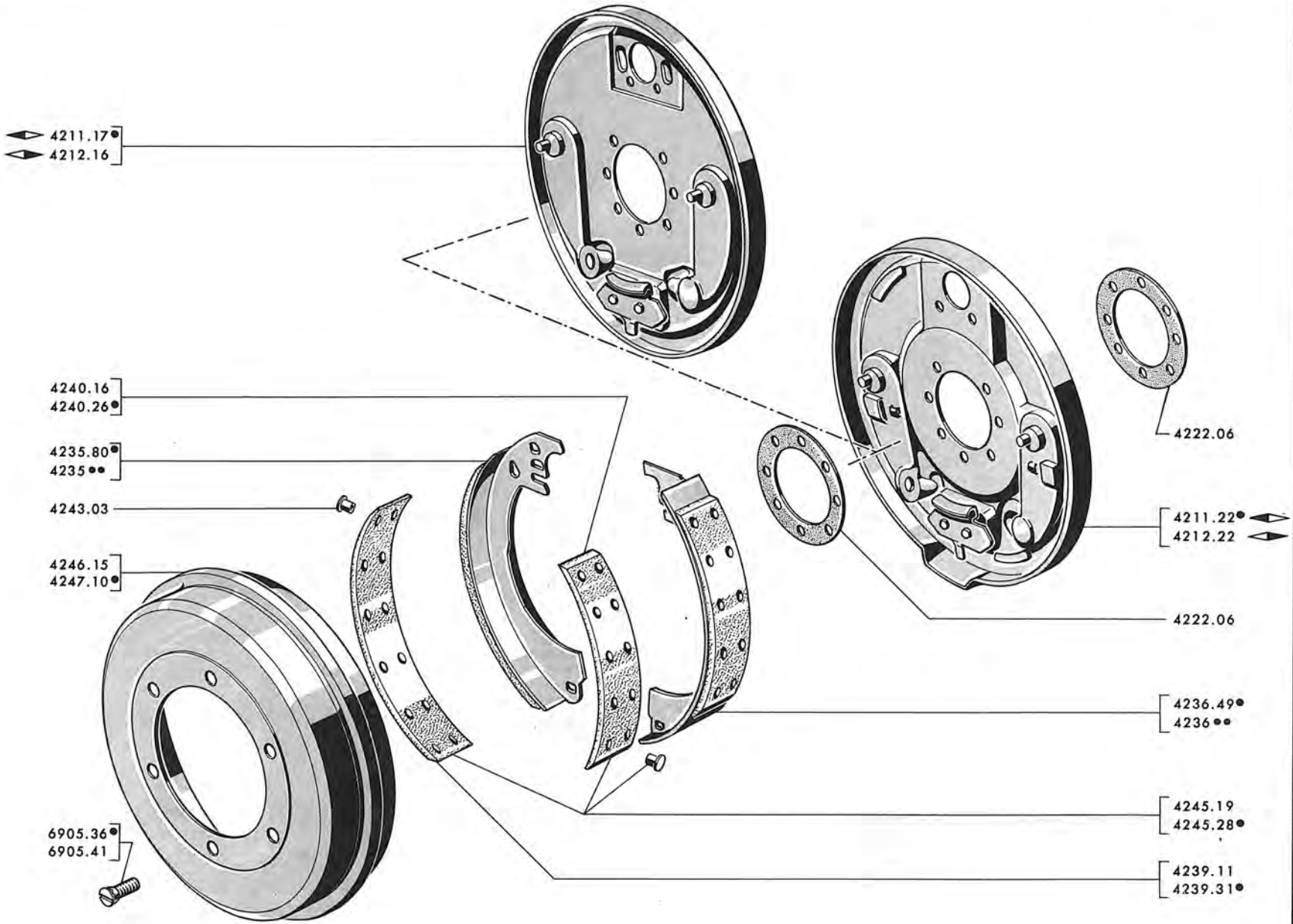

Printed in France

42 S - 404

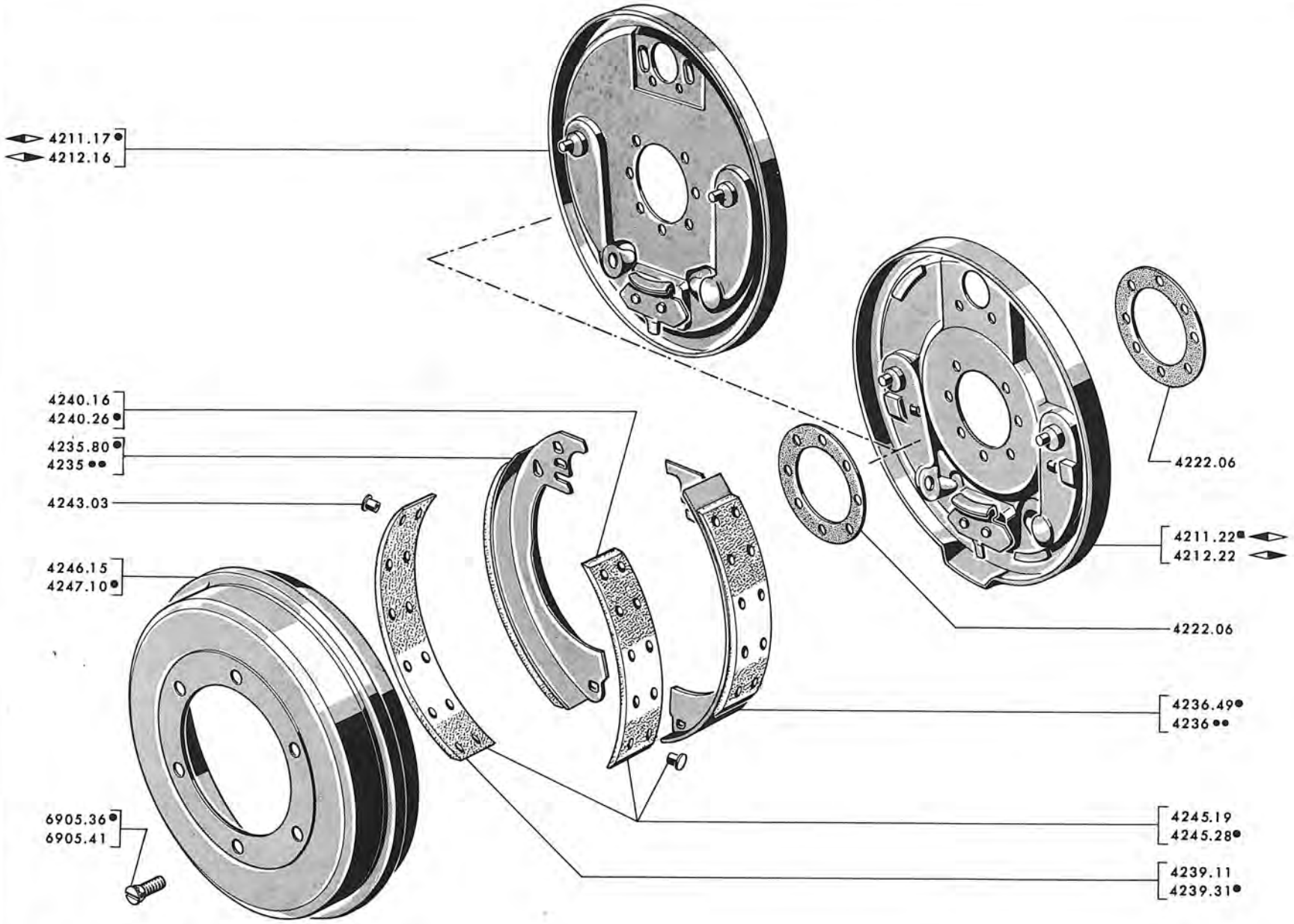

Printed in France

BRAKE PLATES, SHOES, AND DRUMS

Sedan (Cont'd); Cabriolet and Coupé

Brake Diameter (mm.)	255			255				255		
Lining Size (mm.)	267 x 35 x 5 (leading) 219 x 35 x 5 (trailing)			267 x 45 x 5 (leading) 219 x 45 x 5 (trailing)				267 x 35 x 5 (leading) 219 x 35 x 5 (trailing)		
404 XC6 TW → ⊣			QTY. REQ.	5.075.000 5.095.600 1968 Motor-Show		QTY. REQ.	404 A8 → ⊣	1.910.000 1.910.100		QTY. REQ.
404/8 → ⊣				6.980.000 6.980.300 1968 Motor-Show			404 DA → ⊣	3.060.000 3.060.687 End of Prod.		
404 D → ⊣	4.600.000 4.609.342			4.609.342			404 C Injection → ⊣	4.590.000 4.594.000 1964 Motor-Show		
404 Injection → ⊣	4.550.000 4.570.000 1964 Motor-Show						404 C Carburettor → ⊣	4.495.000 4.498.000 1964 Motor-Show		
	Exchange	New		Exchange	New			Exchange	New	
PLATE, brake :										
- ◀		4211.17	1		4211.22	1			4211.17	1
- ▶		4212.16	1		4212.22	1			4212.16	1
GASKET, paper (◀ ★)		4222.06	4		4222.06	4			4222.06	4
SHOE, with lining :										
- leading	4235.33	4235.23	2	4235.81	4235.80	2		4235.33	4235.23	2
- trailing	4236.29	4236.24	2	4236.50	4236.49	2		4236.29	4236.24	2
LINING - 4Z- :										
- leading shoe		4239.11	2		4239.31	2			4239.11	2
- trailing shoe ;		4240.16	2		4240.26	2			4240.16	2
RIVET, brass, 3.75 x 7 mm.		4243.03	-		4243.03	-			4243.03	-
SET of 4 LININGS, with rivets		4245.19	1		4245.28	1			4245.19	1
DRUM		4246.15	2		4247.10	2			4246.15	2

(★) Use with 2 washers 3337.01 → ⊣ 404:4.559.574; D:4.600.483; C:4.497.246, 4.592.453

BRAKE PLATES, SHOES, AND DRUMS

Family Car, Station-Wagon

Brake Diameter (mm.)	280			280				280		
Lining Size (mm.)	280 x 50 x 5 (leading) 248 x 50 x 5 (trailing)			280 x 60 x 6 (leading) 248 x 60 x 6 (trailing)				280 x 60 x 6 (leading) 248 x 60 x 6 (trailing)		
404 LXC5 TW →	4.825.000 4.900.000 7.000.000 7.001.184 1970 Motor-Show		QTY. REQ.			QTY. REQ.	404 LXC7 TW →	4.944.200 4.945.094 7.450.000		QTY. REQ.
404 LXC6 TW →	4.940.000 4.943.400			4.943.400 4.943.963 1970 Motor-Show			404 U6B →	7.240.000		
404 LD →	4.975.000 4.994.400			4.994.400			404 U7 →	7 350.000 7.353.382 (End of Prod.)		
404 U6 →	4.700.000 4.788.800			4.788.800 4.793.553 1970 Motor-Show						
404 U6D →	4.900.000 4.926.500			4.926.500			404 U7D →	7.380.000 7 383.961 (End of Prod.)		
	Exchange	New		Exchange	New			Exchange	New	
PLATE, brake :										
- ◀		4211.20	1		4211.26	1			4211.26	1
- ◀		4212.20	1		4212.26	1			4212.26	1
GASKET, paper (◀ a)		4222.07	4		4222.07	4			4222.07	4
SHOE, with lining :										
- leading	4235.31	4235.20	2	◀ 4237.02	◀ 4237.01	2		◀ 4237.02	◀ 4237.01	2
- trailing	4236.28	4236.23	2	b 4236.53	b 4236.52	2		b 4236.53	b 4236.52	2
RIVET, brass, 3 75 x 7 mm		4243.03	-		4243.03	-			4243.03	-
LINING :										
- leading shoe					4239.38	2			4239.38	2
- trailing shoe					4240.29	2			4240.29	2
SET of 4 LININGS, with rivets		4245.22	1		◀ b 4245.45	1			◀ b 4245.45	1
DRUM		4246 44	2		4246.58	2			4246.58	2

(a) Use with 2 washers 3337.03 → 404LXC5:4.843.344;LD:4.977.752;U6:4.727.288;U6D:4.905.872

(b) Supplied with lateral springs and anchor pieces

Printed in France

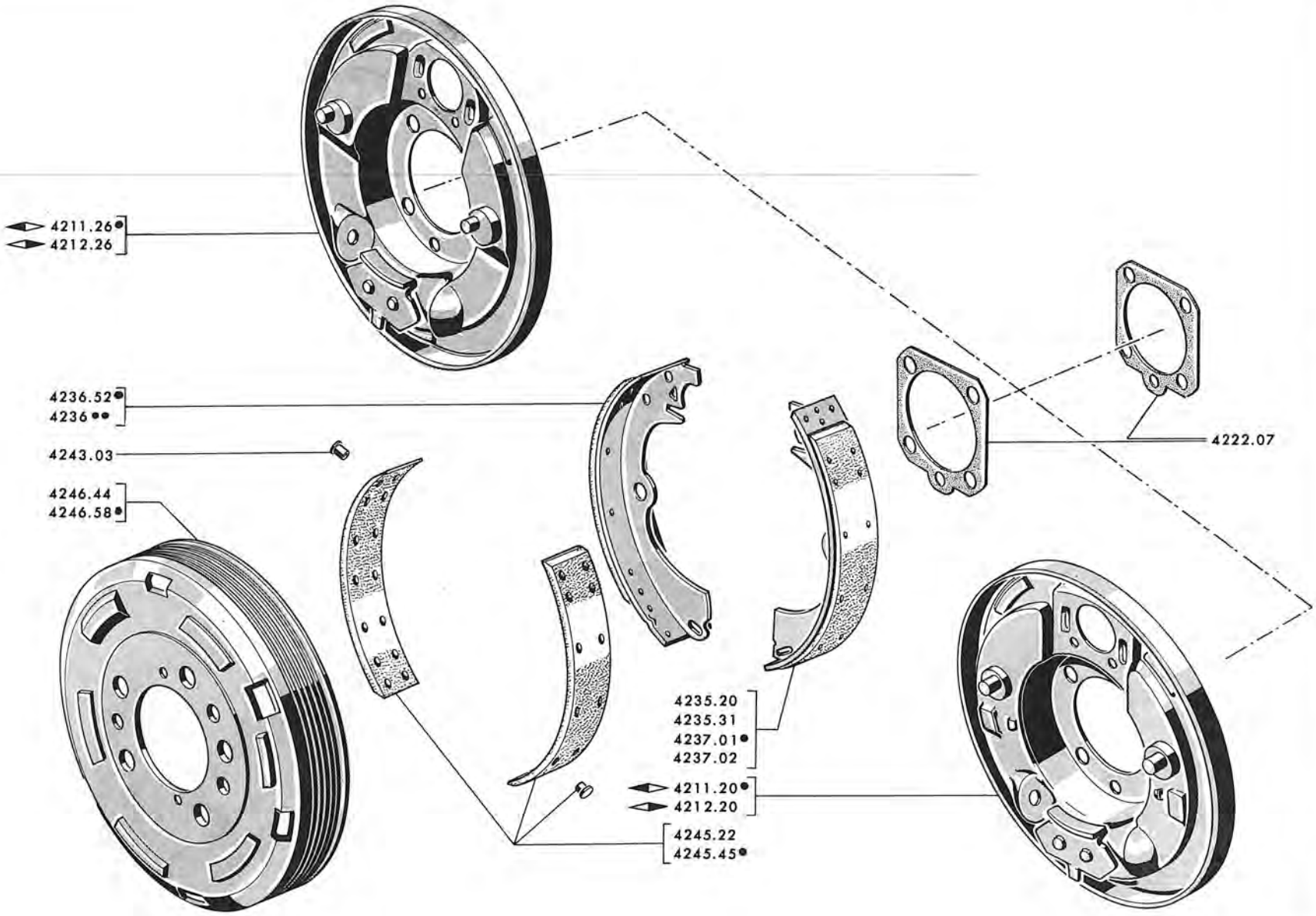

Printed in France

42W - 404

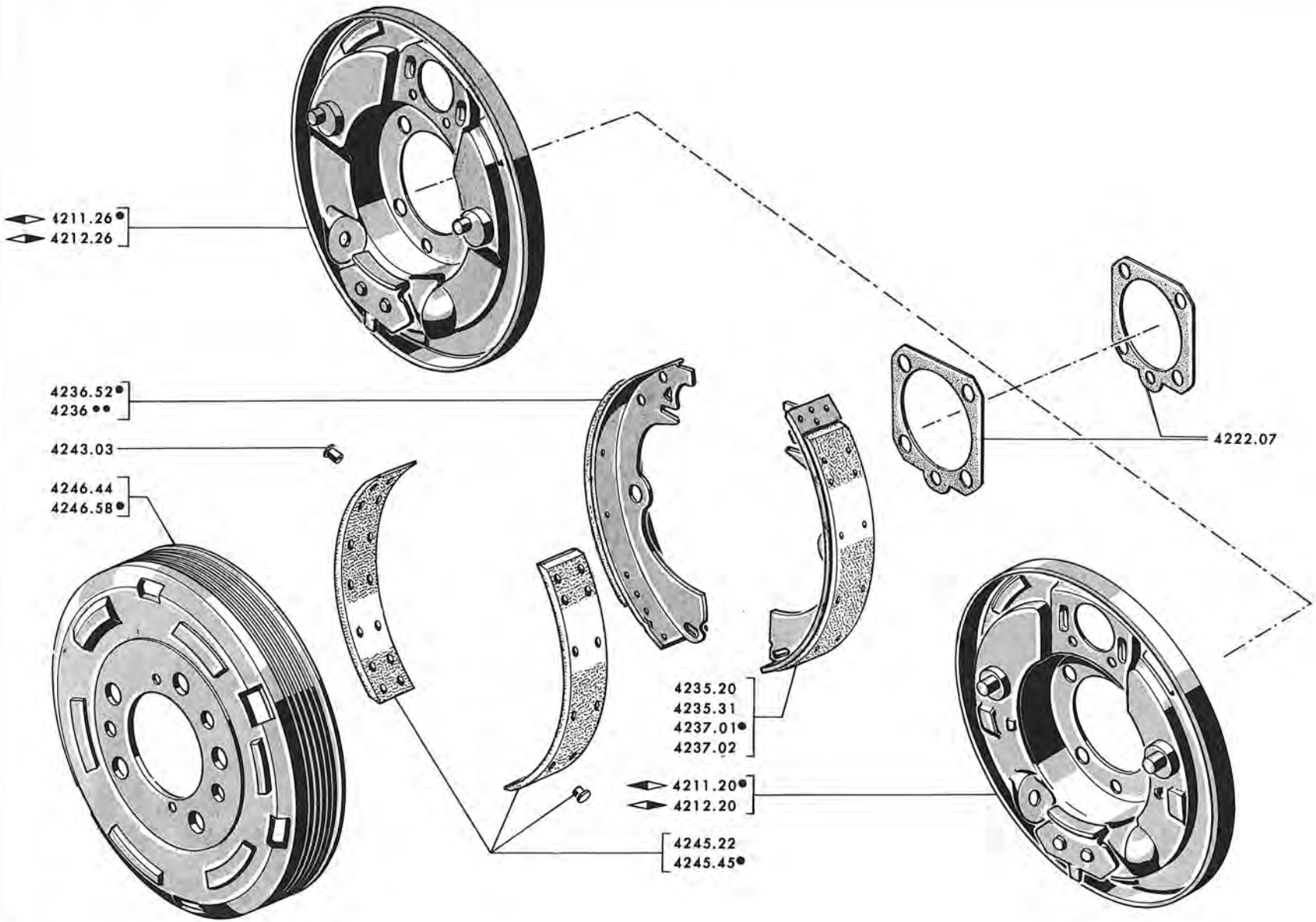

Printed in France

BRAKE PLATES, SHOES, AND DRUMS

Station-Wagon (Cont'd); Light Lorry

Brake Diameter (mm.)	280			280				280			280		
Lining Size (mm.)	280x50x5 (leading) 248x50x5 (trailing)			280x60x6 (leading) 248x60x6 (trailing)				280x50x5 (leading) 248x50x5 (trailing)			280x60x6 (leading) 248x60x6 (trailing)		
404 U6A (USA)	1.920.000 1.925.000 1.932.300 1.938.200		QTY. REQ.	1.938.200 1.938.216 End of Prod.		QTY. REQ.	404 U8	7.010.000 7.022.500		QTY. REQ.	7.022.500 7.026.185 1970 M.S.		QTY. REQ.
404 U6A (Except (USA))	1.920.000 1.925.000						404 U8A				7.270.000 1970 M.S.		
404 U6A (USA) (Auto-Trans.)	7.100.100 7.102.000			7.102.000 7.102.015 End of Prod.			404 U8D	7.040.000 7.051.100			7.051.100		
404 U6S				7.160.000 7.160.746 End of Prod.			404 U10	7.060.000 7.133.900			7.133.900		
404 U6S (Auto-Trans.)				7.162.000 7.162.736 End of Prod.			404 U10D	7.080.000 7.085.650			7.085.650		
	Exchange	New		Exchange	New			Exchange	New		Exchange	New	
PLATE, brake :													
- ◀		4211.20	1		4211.26	1			4211.20	1		4211.26	1
- ◀		4212.20	1		4212.26	1			4212.20	1		4212.26	1
GASKET, paper (◀ a)		4222.07	4		4222.07	4			4222.07	4		4222.07	4
SHOE, with lining :													
- leading	4235.31	4235.20	2	4237.02 [b]	4237.01 [b] ▽	2		4235.31	4235.20	2	4237.02 [b]	4237.01 [b] ▽	2
- trailing	4236.28	4236.23	2	4236.53 ▽	4236.52 ▽	2		4236.28	4236.23	2	4236.53 ▽	4236.52 ▽	2
RIVET, brass, 3.75 x 7 mm.		4243.03	-		4243.03	-			4243.03	-		4243.03	-
LINING :													
- leading shoe					4239.38 [b]	2						4249.38 [b]	2
- trailing shoe					4240.29 ▽	2						4240.29 ▽	2
SET of 4 LININGS, with rivets		4245 22	1		4245.45	1			4245.22	1		4245.45	1
DRUM		4246.44	2		4246.58	2			4246.44	2		4246.58	2

(a) Use with 2 washers 3337.03 ▶ 404U6A:1.921.874

(b) Supplied with lateral springs and anchor pieces

BRAKE PLATES, SHOES, AND DRUMS

Sedan

Brake Diameter (mm.)	255		
Lining Size (mm.)	267 x 44 x 5 (leading) 219 x 44 x 5 (trailing)		
404 XC5 TH	→ 5.100.000 → 5.309.500 1968 Motor-Show		QTY. REQ.
404 XC6 TH	→ 5.311.007 → 5.504.800 1968 Motor-Show		
404 Coupler TH	→ 4.535.000 → 4.537.191 End of Production		
404 (Auto-Trans.)	→ 8.250.000 → 8.259.900 1968 Motor-Show		
404 Injection	→ 4.570.000 → 4.590.000 → 8.200.000 → 8.303.300 End of Production		
	Exchange	New	
PLATE, brake :			
- ◀▶		4211.22	1
- ◀▶		4212.22	1
GASKET, paper		4222.06	4
SHOE, with lining :			
- leading	4235.43	4235.42	2
- trailing	4236.33	4236.32	2
LINING :			
- leading shoe		4239.22	2
- trailing shoe		4240.20	2
RIVET, brass, 3.75 x 7 mm.		4243.03	▪
SET of 4 LININGS, with rivets		4245.31	1
DRUM		4247.10	2

Printed in France

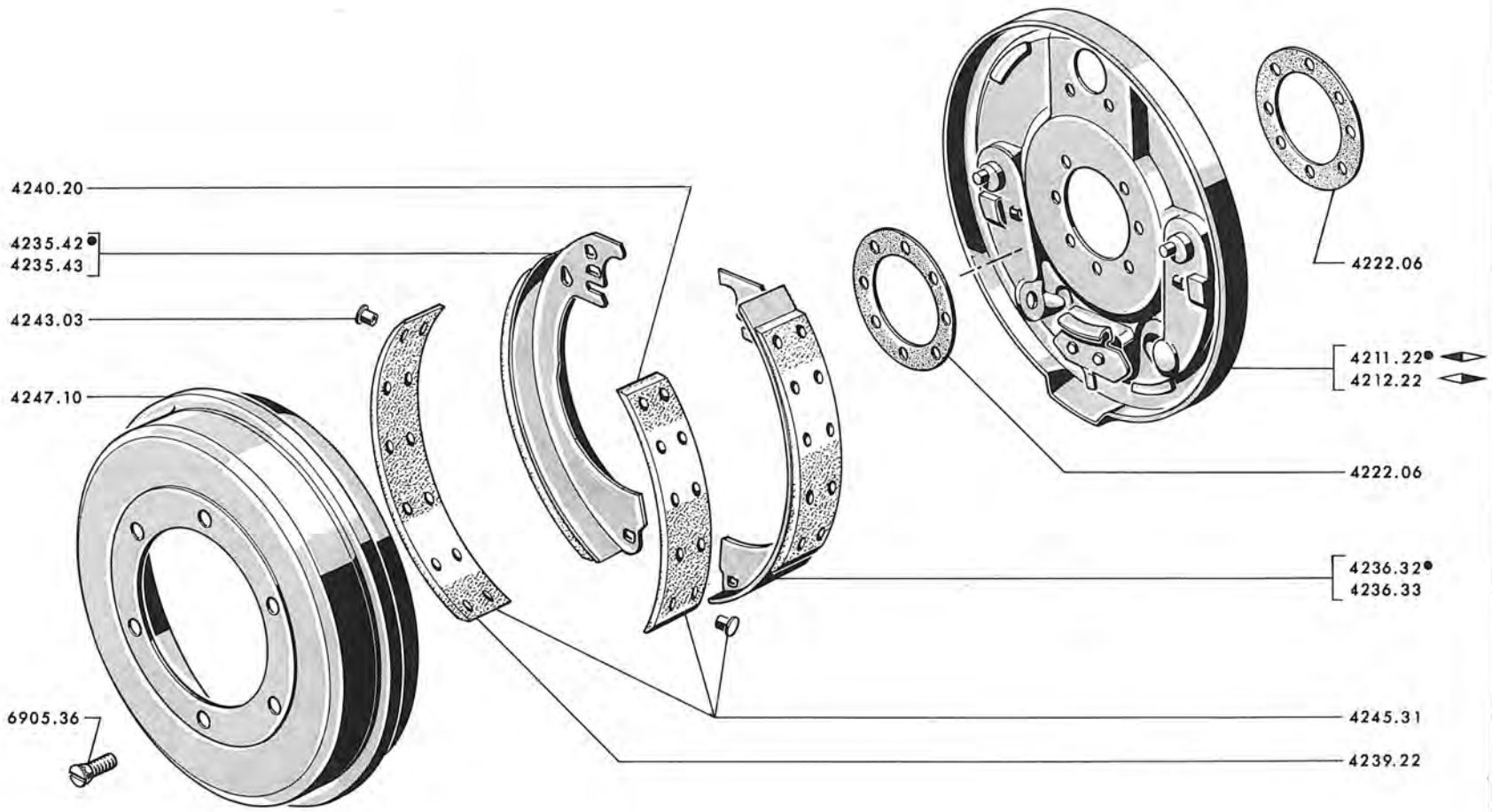
4240.20
4235.42 ●
4235.43
4243.03
4247.10
6905.36
4222.06
4211.22 ●
4212.22
4222.06
4236.32 ●
4236.33
4245.31
4239.22

42AA - 404

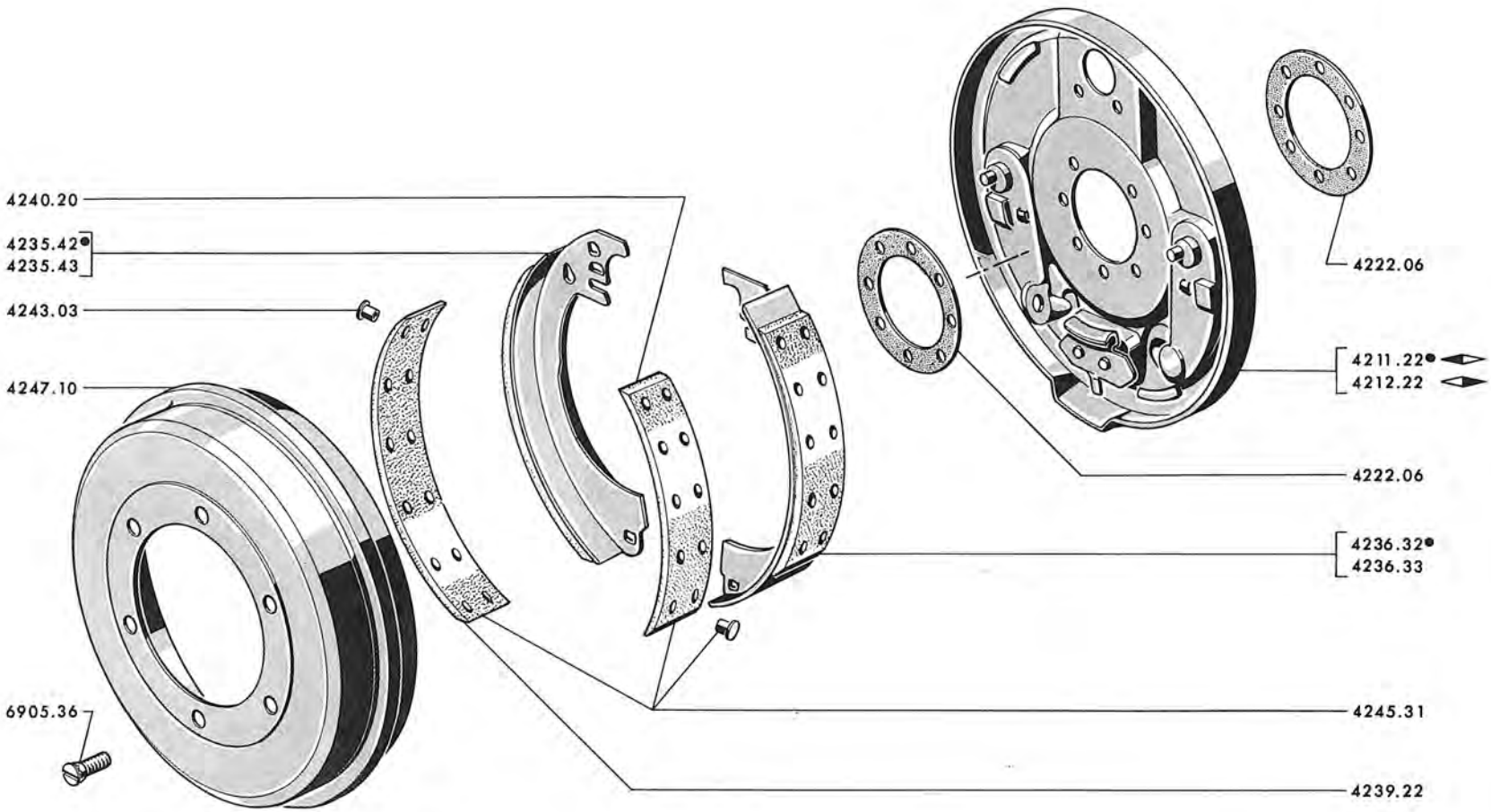

Printed in France

BRAKE PLATES, SHOES, AND DRUMS

Sedan (Cont'd)

Brake diameter (mm.)	255
Lining Size (mm.)	267 x 44 x 5 (leading) 219 x 44 x 5 (trailing)
404 XC5	5.072.600 1968 Motor-Show 5.074.251 1970 Motor-Show
404 XC6	5.504.800 1968 Motor-Show 5.610.412 1970 Motor-Show
404 XC7	5.612.500 1970 Motor-Show
404 (Auto-Trans.)	8.259.900 1968 Motor-Show
404 (USA) (Std. Trans)	5.100.000 5.415.000 8.325.000 8.352.345 End of Production
404 A8	1.910.100 1.910.525 End of Production

	Exchange	New	QTY. REQ.
PLATE, brake :			
- ◀▶		4211.22	1
- ◀▶		4212.22	1
GASKET, paper		4222.06	4
SHOE, with lining :			
- leading	4235.43	4235.42	2
- trailing	4236.33	4236.32	2
LINING :			
- leading shoe		4239.22	2
- trailing shoe		4240.20	2
RIVET, brass, 3.75 x 7 mm.		4243.03	▬
SET of 4 LININGS, with rivets		4245.31	1
DRUM		4247.10	2

	255
	267 x 44 x 5 (leading) 219 x 44 x 5 (trailing)
404 (USA) (Auto-Trans.)	8.250.000 1965 Motor-Show 8.256.600 8.327.500 8.355.340 End of Production
404/8 ◠	6.900.000 1967 Motor-Show 6.906.200 1968 Motor-Show
404/8 ◠ and ◠	6.906.200 1968 Motor-Show 6.906.676 End of Production
404 C Carburettor	4.498.000 1964 Motor-Show 4.671.100 End of Production
404 C Injection	4.594.000 1964 Motor-Show 4.600.000 6.800.000 6.803.500 End of Production

	Exchange	New	QTY. REQ.
PLATE, brake :			
- ◀▶		4211.22	1
- ◀▶		4212.22	1
GASKET, paper		4222.06	4
SHOE, with lining :			
- leading	4235.43	4235.42	2
- trailing	4236.33	4236.32	2
LINING :			
- leading shoe		4239.22	2
- trailing shoe		4240.20	2
RIVET, brass, 3.75 x 7 mm.		4243.03	▬
SET of 4 LININGS, with rivets		4245.31	1
DRUM		4247.10	2

BRAKE PLATES, SHOES, AND DRUMS

Family Car, Station-Wagon

Brake Diameter (mm.)	280			280		
Lining Size (mm.)	280 x 49 x 5 (leading) 248 x 49 x 5 (trailing)			280 x 60 x 6 (leading) 248 x 60 x 6 (trailing)		
404 LXC5 TH → → → →	4.855.000 4.884.000 7.120.000 7.120.350		QTY. REQ.	7.120.350 7.120.994 1970 Motor-Show		QTY. REQ.
404 LXC6 TH → → → →	4.884.000 4.895.000 6.820.000 6.864.000			6.864.000 6.878.721 1970 Motor-Show		
404 LXC7 TH → →				6.879.500 1970 Motor-Show		
404 U6A (USA) → →	1.925.000 1.932.300 1967 Motor-Show					
404 U6A (Except (USA)) → →	1.925.000 1.938.200			1.938.200 1.938.216 End of Production		
404 U6A (USA) (Auto-Trans.) → →	7.100.000 7.100.100					
404 U6A Auto-Trans. (Except (USA)) → →	7.100.000 7.102.000			7.102.000 7.102.015 End of Production		
	Exchange	New		Exchange	New	
PLATE, brake :						
- ◀		4211.20	1		4211.26	1
- ◀		4212.20	1		4212.26	1
GASKET, paper		4222.07	4		4222.07	4
SHOE, with lining :						
- leading	4235.69	4235.68	2	◀ 4237.04 a	4237.03	2
- trailing	4236.44	4236.43	2	a 4236.55	◀ 4236.54	2
LINING :						
- leading shoe					a 4239.36	2
- trailing shoe					4240.27	2
RIVET, brass, 3.75 x 7 mm.		4243.03	■		4243.03	■
SET of 4 LININGS, with rivets		4245.25	1		◀ a 4245.44	1
DRUM		4246.44	2		4246.58	2

a) Supplied with lateral springs and anchor pieces

Printed in France

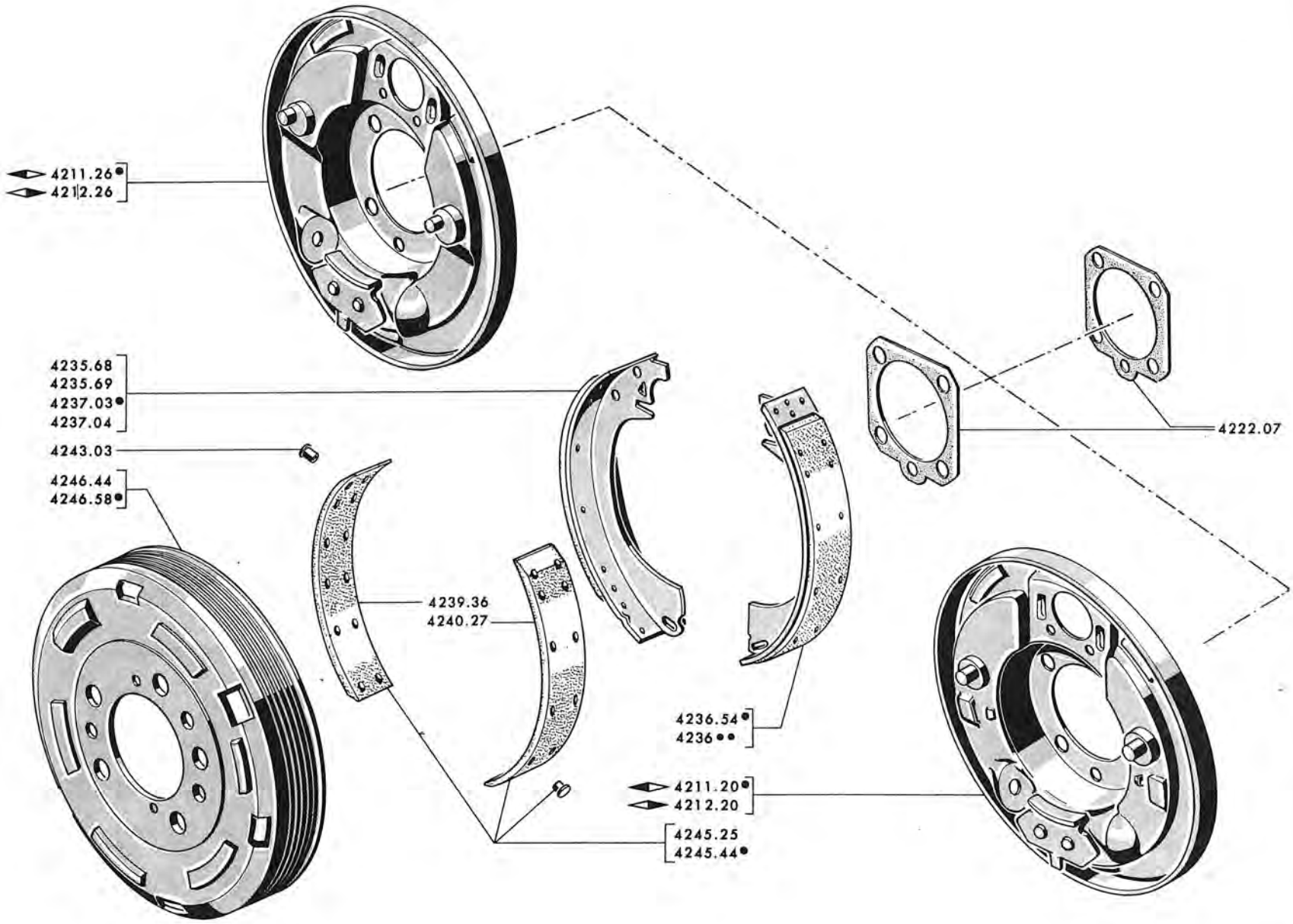
4211.26●
4212.26
4235.68
4235.69
4237.03●
4237.04
4243.03
4246.44
4246.58●
4239.36
4240.27
4222.07
4236.54●
4236●●
4211.20●
4212.20
4245.25
4245.44●

43 A - 404

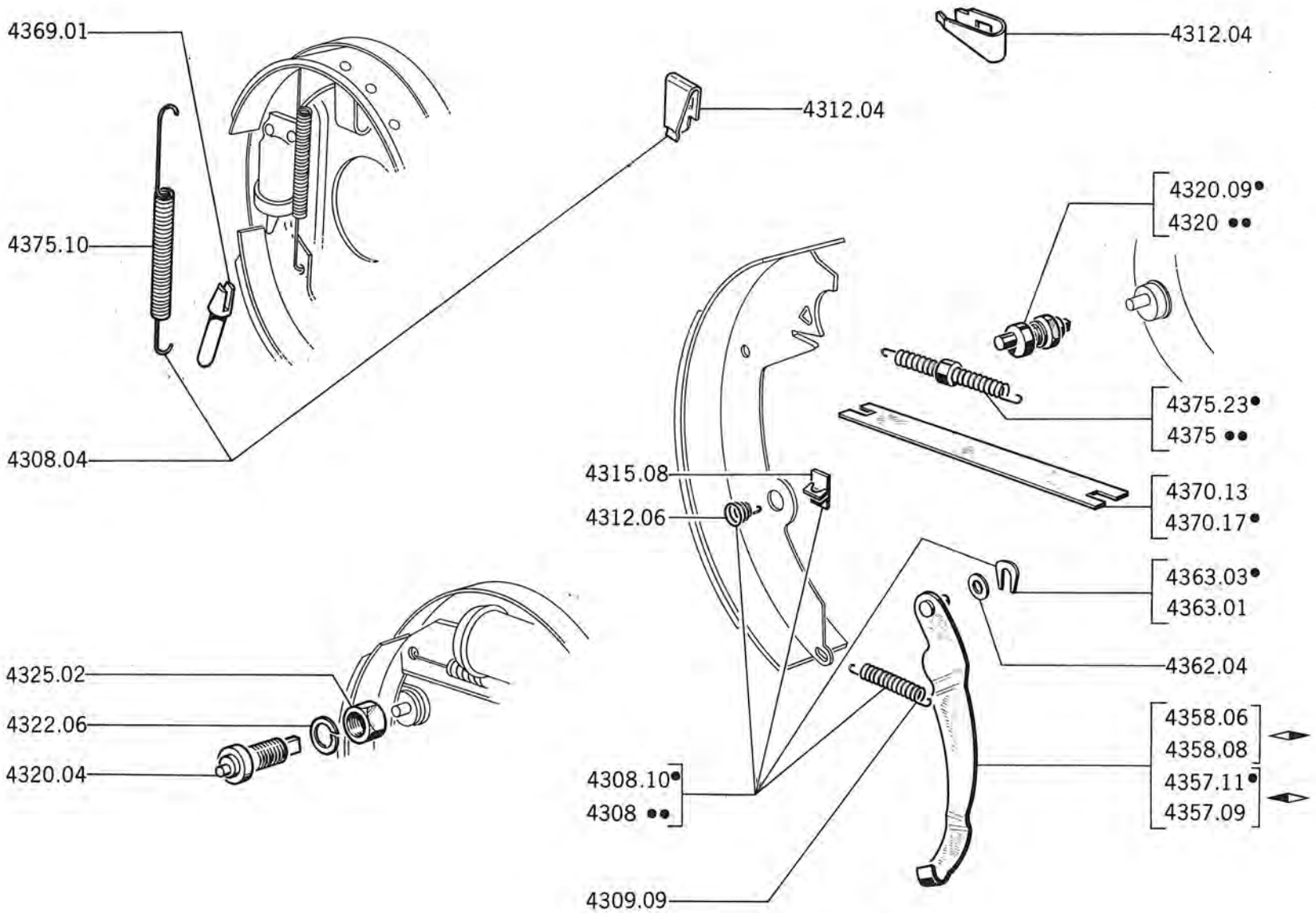

Printed in France

A – →| 404CX5TW:5.072.600;XC6TW:5.095.600,4.530.014,4.570.000;404/8 :6.980.300;A8:1.910.100; C:4.498.000;LXC5TW:7.001.184;LXC6TW:4.943.400;LD:4.994.000;U6:4.788.800;U6A Except (USA) : 1.925.000;U6A (USA):1.938.200;U6A (USA) Auto-Trans.7.102.000;U6D:4.926.500;U8:7.022.500;U8D: 7.051.100;U10:7.133.900;U10D:7.085.650; all 404DA,D ..... A

B – |→ 404LXC7TW:4.944.200;LXC6TW:4.943.400;LD:4.999.400;U6:4.788.800;U6D:4.926.500;U6A (USA) : 1.938.200,7.102.000;U8:7.022.500;U8D:7.051.100;U10:7.133.900;U10D:7.085.650; all 404U6S, U7,U7D ..... B

	KIT, brake spring :		
4308.04	front	1	1
4308.05	rear (Utility Vehicles)	1	
4308.10	rear		1
	SPRING :		
4309.09	pull-off, rear brake shoe	2	2
4312.04	lateral : – front	4	4
	– rear	4	
4312.06	lateral, rear		4
4315.08	ANCHOR, lateral spring		4
4320.03	ECCENTRIC ASSY., rear brake (for repair)		
4320.04	ECCENTRIC, only, rear brake (for repair) → (approx) : 404:4.026.300; 4.500.200	–	
4322.06	WASHER, spring, Ø 14 mm.	–	
4325.02	NUT, Ø 14 mm.	–	
	ECCENTRIC ASSY., (for repair) :		
4320.08	front brake → (approx) 404:4.026.300, 4.500.200	–	–
4320.09	rear brake and all other types	–	–
	LEVER, rear brake control :		
4357.09	◀▷ Except Utility Vehicles	1	
4358.06	◀▶ Except Utility Vehicles	1	
4357.11	◀▷ Utility Vehicles	1	1
4358.08	◀▶ Utility Vehicles	1	1
4362.04	WASHER, flexible, 10 x 19 x 0.5 mm., rear brake lever pin	2	2
4363.01	CLIP	2	
4363.03	CLIP		2
4369.01	PUSH-ROD, front brake shoes control	4	4
4370.13	LINK, rear brake shoes control	2	
4370.17	LINK, rear brake shoes control		2
	SPRING, pull-off :		
4375.10	front brake shoes (404 →| 1968 Motor-Show and all other types)	4	4
4375.13	with rubber ring, rear brake shoes (Sedan, 404C) (Remove the rubber ring from the control link is there is any)	2	2
4375.14	with rubber ring, rear brake shoes (Utility Vehicles)	2	
4375.23	with rubber ring, rear brake shoes (Utility Vehicles)		2

A – → 404XC5TH:5.100.000;XC6TH:5.311.007,4.535.000,8.250.000,4.570.000; (USA) :5.100.000;8.250.000; A8:1.910.100;C:4.498.000,4.594.000;LXC5TH:4.855.000;LXC6TH:4.884.000,U6A Except (USA) :1.925.000 → 5.307.921,5.352.374,4.537.191,8.253.714,8.234.142;5.352.374,8.253.714,1.910.382,4.499.762, 6.800.236,4.882.273,4.890.725,1.929.137 ..... A

B – → 404XC5TH:5.307.921;XC6TH:5.352.374,8.234.142; (USA) :5.352.374,8.253.714;U6A (USA) :1.925.000, 7.100.000 and → 404/8:6.900.000;A8:1.910.382;C:4.499.762,6.800.236,LXC5TH:4.882.273;LXC6TH: 4.890.725;U6A - Except (USA) :1.929.137,7.100.000 → 6.909.676,1.910.525,4.671.100,6.803.500; 7.120.350,6.864.000,1.938.200,7.102.000 ..... B

C – → 404LXC5TH:7.120.350;LXC6TH:6.864.000;U6A - Except (USA) :1.938.200,7.102.000; all LXC7TH: C

	KIT, brake spring :			
4308.03	front		1	1
4308.06	rear (Sedan, Cabriolet, Coupé)	1	1	
4308.10	rear			1
✓ 4308.13	front	1		
	SPRING, lateral :			
4312.04	front	4	4	4
	– rear	4	4	
4312.06	rear			4
4315.08	ANCHOR, lateral spring			4
	ECCENTRIC ASSY., for repair :			
4320.09	rear	–	–	–
4320.10	front	–	–	–
	LEVER, rear brake control :			
4357.09	◀▶ Sedan, Cabriolet, Coupé	1	1	
4358.06	◀▶ Sedan, Cabriolet, Coupé	1	1	
4357.11	◀▶ Utility Vehicles	1	1	1
4358.08	◀▶ Utility Vehicles	1	1	1
4362.04	WASHER, flexible, 10 x 19 x 0.5 mm., rear brake lever pin	2	2	2
4363.01	CLIP	2	2	
4363.03	CLIP			2
4370.13	LINK, rear brake shoes control	2	2	
4370.17	LINK, rear brake shoes control			2
	SPRING, pull-off :			
4375.13	with rubber ring rear brake shoes (Remove the rubber ring from the control link if there is any)			2
4375.15	inner, front brake shoes	4		
4375.16	with rubber ring, rear brake shoes (Sedan, Cabriolet, Coupé)	2	2	
4375.17	outer, front brake shoes ◀▶	2		
4375.18	outer, front brake shoes ◀▶	2		
4375.20	with rubber ring rear brake shoes (Utility Vehicles)	2	2	
4375.21	inner, front brake shoes		4	4
4375.22	outer, front brake shoes		4	4
4375.23	with rubber ring, rear brake shoes (Utility Vehicles)		2	

Printed in France

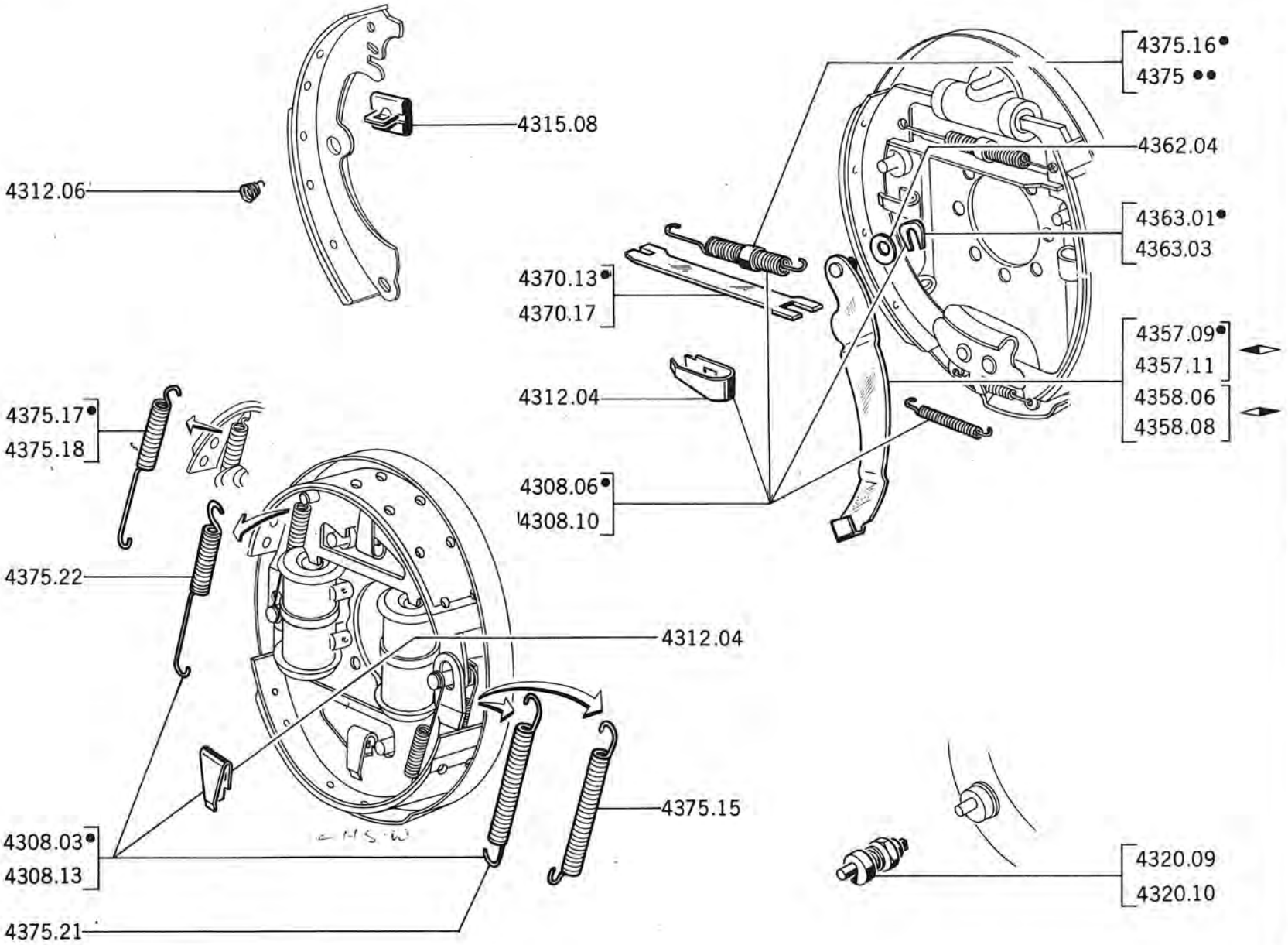
4315.08
4312.06
4375.16•
4375 ••
4362.04
4363.01•
4363.03
4370.13•
4370.17
4357.09•
4357.11
4358.06
4358.08
4312.04
4375.17•
4375.18
4308.06•
4308.10
4375.22
4312.04
4375.15
4308.03•
4308.13
4375.21
4320.09
4320.10

44A - 404

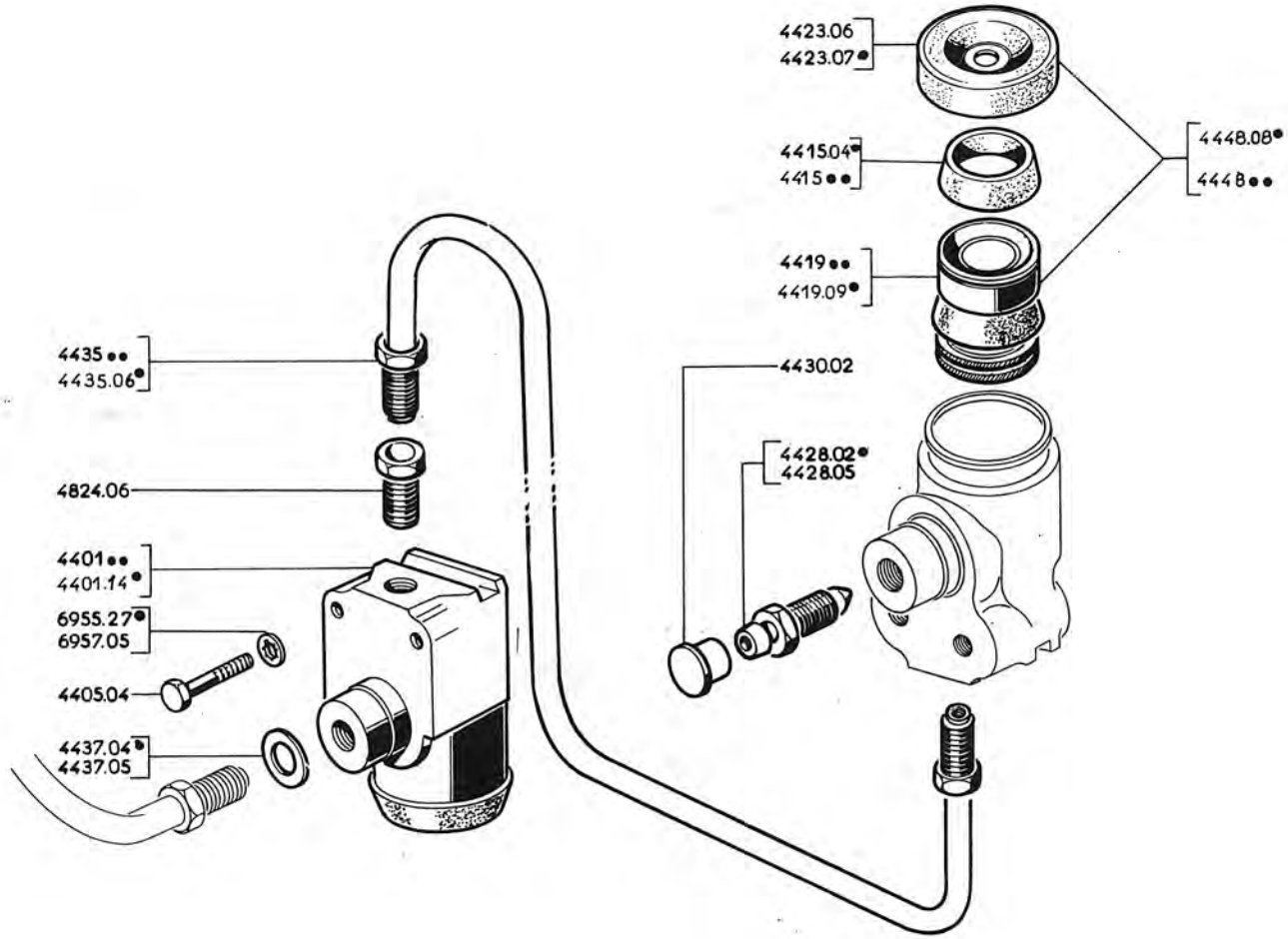

Printed in France

Brake Pipes Ø 4.85x6.35 mm.	Brake Cylinder Ø	1 1/8	– A –	→| 404:4.012.423,4.500.312 ..... A
		1 1/8" and 1 1/4"	– B –	|→ 404:4.012.423;4.500.312 →| 4.108.664,4.504.085 ..... B
		30 mm.	– C –	|→ 404:4.108.664,4.504.085;DA:3.060.000 →| 4.388.565,4.526.883 3.060.542 →| 404L:4.854.909;LD:4.981.019;U6:4.745.998;U6D:4.909.572; U6A:1.925.000 C
		1 1/8"	– D –	→| 404A8:1.910.100;D:4.609.342 |→ 404:4.388.565,4.526.883,4.550.000;DA:3.060.542;C:4.495.000, 4.590.000 →| 5.057.592,4.530.001,4.570.000,3.060.687,4.498.000,4.594.000 ..... D
Brake Pipes Ø 3.34 x4.76 mm.		30 mm.	– E –	|→ 404XC5:5.057.592;XC6:5.075.000 →| 1968 Motor-Show |→ 404D:4.609.342;LXC5:4.854.909;LD:4.981.019;U6:4.745.998; U6D:4.909.572;U6A (USA):1.932.300,7.100.100; all 404LXC6, LXC7,U7,U7D,U6S,U8,U8D,U10,U10D |→ 404 Coupler :4.530.001 →| 4.535.000 ..... E

4401.14	CYLINDER, 1 1/8"	4	2		4	
4401.19	CYLINDER, 1/14", w/o bleed screw		2			
4401.20	CYLINDER, diam. 30 mm.			4		
4401.24	CYLINDER, diam. 30 mm.					4
4405.04	SCREW, 7 x 33 mm., attaching, brake cylinder	8	8	8	8	8
4415.04	CUP, rubber, for brake cylinder 1 1/8"	4	2		4	
4415.07	CUP. rubber, for brake cylinder diam. 30 mm.			4		4
4415.08	CUP, rubber, for brake cylinder 1 1/4"		2			
4419.09	PISTON, with rubber cup, for brake cylinder 1 1/8"	4	2		4	
4419.11	PISTON, with rubber cup, for brake cylinder 1 1/4"		2			
4419.12	PISTON, with rubber cup; for brake cylinder diam. 30 mm.			4		4
4423.06	BOOT, rubber, for brake cylinder 1 1/4" or diam. 30 mm.		2	4		4
4423.07	BOOT, rubber, for brake cylinder 1 1/8"	4	2		4	
4428.02	SCREW, bleed	2	2	2	2	
4428.05	SCREW, bleed					2
4430.02	CAP, brake cylinder bleed screw	2	2	2	2	2
4435.04	TUBE, connecting, with screw-unions (Utility Vehicles column «C», all column «D»)			2	2	
4435.06	TUBE, connecting, with screw-unions (→| 404(Carburettor):4.388.565,4.526.883; 404DA:3.060.542)	2	2	2		
4435.08	TUBE, connecting, with screw-unions					2
4824.06	SCREW-UNION	4	4	4	4	
4437.04	GASKET, 11.5 x 19 x 2 mm., brake feed hose	2	2	2	2	
4437.05	GASKET, 9.7 x 15.6 x 2 mm., brake feed hose (See 22IJ,45KL,45MN,45OP,46GH,48IJ,48KL)					2
4438.04	(See 46AB,46CD)					
4442.01	(See 45KL,45MN,46AB,46CD,46EF,46GH)					
	KIT, repair :					
4448.06	reduced, for brake cylinder 1 1/8"					
4448.08	regular, for brake cylinder 1 1/8"	4	2		4	
4448.09	regular, for brake cylinder 1 1/4"		2			
4448.11	regular, for brake cylinder diam. 30 mm.					
4448.12	reduced, for brake cylinder diam, 30 mm.			4		4
4448.13	reduced, for brake cylinder 1 1/4"		2			

→ 404XC5:5.100.000;XC6:5.311.007,4.535.000,8.250.000, 4.570.000; (USA) :5.100.000, 8.250.000;A8:1.910.100;C:4.498.000,4.594.000;LXC5TH:4.855.000;LXC6TH:4.884.000; U6A:1.925.000,7.100.000

4401.30	CYLINDER, 1 3/8"	4
4405.06	SCREW, 7 x 15 mm., attaching, brake cylinder	8
4411.07	SPRING	8
4415.11	CUP, rubber	8
4419.17	PISTON, with rubber cup	8
4423.09	BOOT, rubber	8
4428.05	SCREW, bleed	2
4430.02	CAP, brake cylinder bleed screw	2
4435.09	TUBE, connecting -with screw-unions-	2
4437.05	GASKET, 9.7 x 15.6 x 2 mm. -brake cylinder union :	
	– brake feed hose side	2
	– brake cylinder side	2
4438.05	UNION, adjustable	2
4442.02	GASKET, 12.3 x 16 x 1.2 mm., brake cylinder union-screw (See 46GH, 48KL)	2
4443.02	UNION-SCREW, brake cylinder adjustable union (See 46GH)	2
	KIT, repair :	
4448.16	reduced	4
4448.18	standard	4

Printed in France

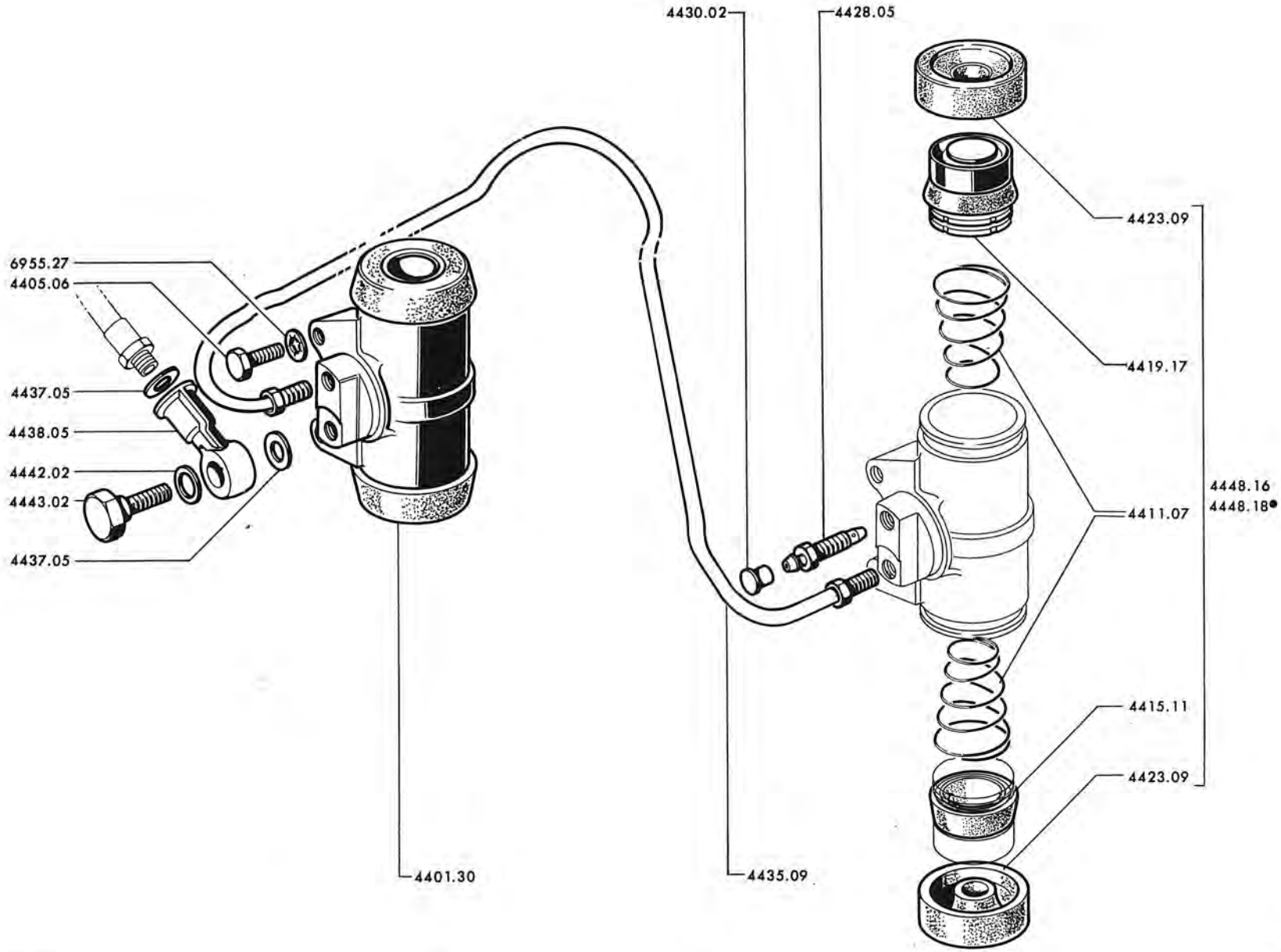
4430.02
4428.05
6955.27
4405.06
4437.05
4438.05
4442.02
4443.02
4437.05
4401.30
4435.09
4423.09
4419.17
4411.07
4448.16
4448.18●
4415.11
4423.09

44E - 404

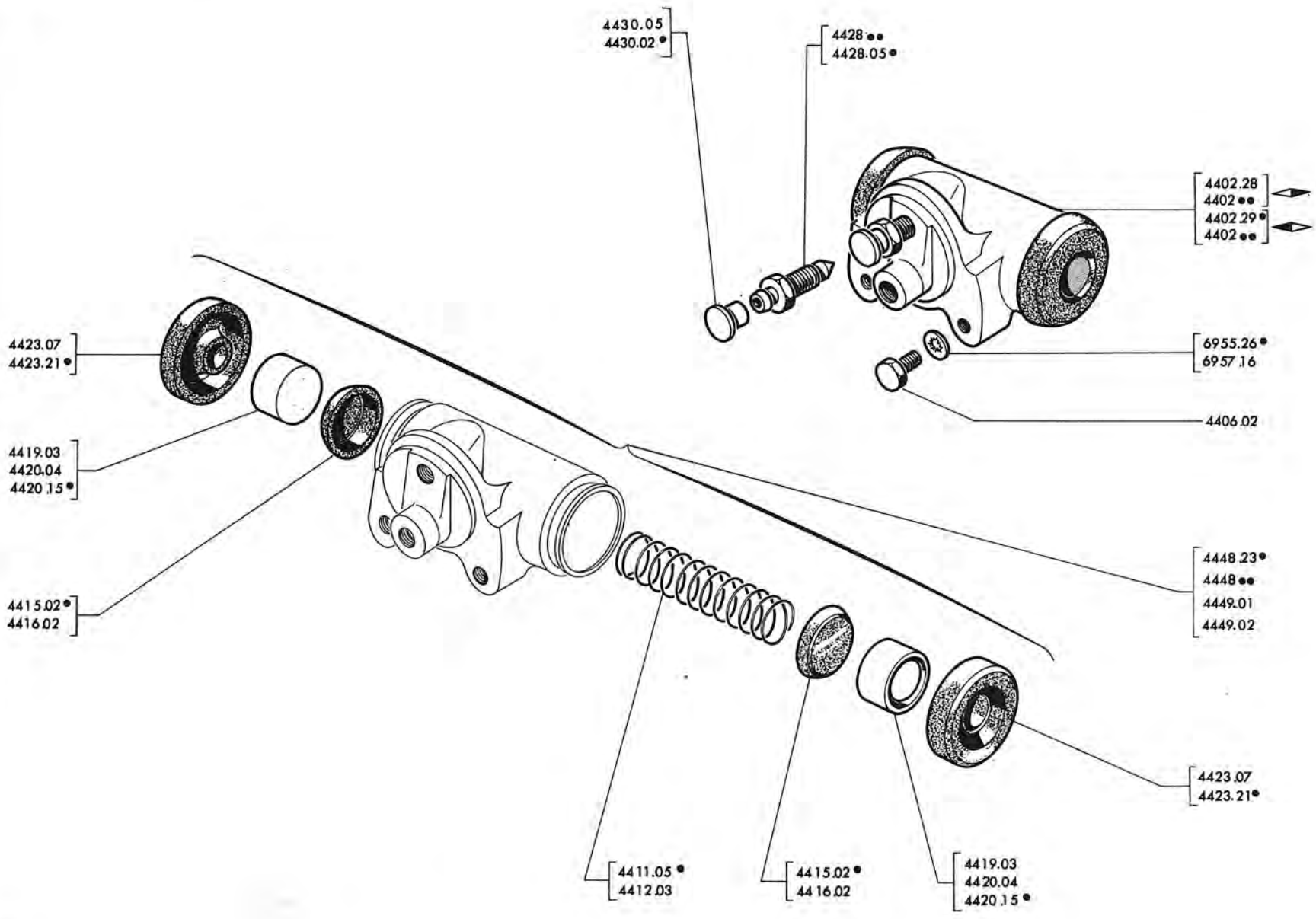

Printed in France

BRAKE PIPES Ø 4.85x6.35mm.	A – All 404DA → 404:5.057.592;4.530.001,4.570.000;A8:1.910.100;C:4.498.000,4.594.000,D:4.609.342 .. A B – → 404L:4.854.909;LD:4.981.019;U6:4.745.998;U6D:4.909.572;U6A:1.925.000 ..... B
BRAKE PIPES Ø 3.34x4.76mm.	C – → 404XC5:5.057.592;XC6:5.075.000;404/8 :6.980.000 → 1968 Motor-Show → 404D:4.609.342 → 404 Coupler :4.530.001 → 4.535.000 ..... C D – → 404LXC5:4.854.909;LXC6:4.940.000;LD:4.981.019;U6:4.745.998;U6D:4.909.572;U6A (USA) : 1.932.300;7.100.100;U8:7.010.000;U8D:7.040.000;U10:7.060.000;U10D:7.080.000 → 7.001.300;4.943.400;4.994.400,4.788.800,4.926.500,1.938.200;7.102.000,7.022.500 7.051.100,7.133.900,7.085.650 ..... D E – → 404LXC5:7.001.300;LXC6:4.943.400;LD:4.994.400;U6:4.788.800;U6D:4.926.500; U6A:1.938.200,7.102.000;U8:7.022.500;U8D:7.051.100;U10:7.133.900;U10D:7.085.650 ..... E

	CYLINDER, rear brake :						
4402.09	1"	2					
4402.10	1 1/8"		1				
4402.11	1 1/8"		1				
4402.15	1"			2			
4402.16	1 1/8"				1		
4402.17	1 1/8"				1		
4402.28	1 1/8"						1
4402.29	1 1/8"						1
4406.02	SCREW, attaching, 6 x 12 mm., brake cylinder	4	4	4	4	4	
4411.05	SPRING		2		2	2	
4412.03	SPRING	2		2			
4415.02	CUP, rubber		4		4	4	
4416.02	CUP, rubber	4		4			
4419.03	PISTON		4		4		
4420.04	PISTON	4		4			
4420.15	PISTON						4
4423.07	BOOT, rubber	4	4	4	4		
4423.21	BOOT, rubber						4
	SCREW, bleed :						
4428.02	(British Thread)	2	2				
4428.05	(British Thread)			2	2	2	
4428.08	(Metric Thread)						2
4430.02	CAP, bleed screw (British Thread)	2	2	2	2	2	
4430.05	CAP, bleed screw (Metric Thread)						2
	KIT, repair :						
4448.01	standard, for cylinder 1 1/8"						
4448.02	reduced, for cylinder 1 1/8"		2		2		
4428.23	standard, for cylinder 1 1/8"						
4428.24	reduced, for cylinder 1 1/8"						2
4449.01	standard, for brake cylinder 1"						
4449.02	reduced, for brake cylinder 1"	2		2			

A – ⟼ 404XC5:5.100.000,4.535.000,8.250.000,4.570.000;A8:1.910.100;C:4.498.000,4.594.000; LXC5:4.855.000;U6A:1.925.000 ⟼| 5.265.261,4.537.062,8.250.126,8.212.061,1.910.310, 4.671.100 ,6.803.500,4,879.400,1.927.900 ..... A

B – ⟼ 404XC5:5.265.261;XC6:5.311.007,4.537.062,8.250.126,8.212.061;A8:1.910.310 ⟼| 1968 Motor-Show

⟼ 404 (USA) :5.265.261,8.250.126 ⟼| 1967 Motor-Show ..... B

C – 404 (USA) and 404/8 ⟼ 1967 ⟼| 1968 Motor-Show

⟼ 404LXC5:4.879.400;LXC6:4.884.000;U6A (Except (USA)) :1.927.900,7.100.000

⟼ 404U6A (USA) :1.927.900,7.100.000 ⟼| 1967 Motor-Show C

	CYLINDER, brake, rear :			
4402.14	diam. : 16 mm.(404,404A8,404C)	2		
4402.19	diam. : 17.5 mm. ◀▶ (404L,404U6A)	1		
4402.20	diam. : 17.5 mm. ◀▶ (404L,404U6A)	1		
4402.21	diam. : 19 mm.		2	
4402.22	diam. : 20.6 mm. ◀▶ ⟼| 404LXC5:7.120.350;LXC6:6.864.000 and all vehicles column « C »			1
4402.23	diam. : 20.6 mm. ◀▶			1
4402.30	diam. : 20.6 mm. ◀▶ ⟼ 404LXC5:7.120.350;LXC6:6.864.000			1
4402.31	diam. : 20.6 mm. ◀▶			1
4406.02	SCREW, attaching, 6 x 12 mm., brake cylinder	4	4	4
4412.05	SPRING	2	2	2
	CUP, rubber :			
4416.05	(404,404A8,404C)	4		
4416.06	(404L,404U6A)	4		
4416.07	.....		4	
4416.08	.....			4
	PISTON :			
4420.07	(404,404A8,404C)	4		
4420.08	(404L,404U6A)	4		
4420.09	.....		4	
4420.11	.....			4
	BOOT, rubber :			
4423.08	.....	4		
4423.13	(Lockheed) (⟼| 404LXC5:7.120.350;LXC6:6.864.000; and all vehicles column « B » and « C »		4	4
4423.22	(Lockheed) (⟼ 404LXC5:7.120.350;LXC6:6.864.000)			4
4428.05	SCREW, bleed	2	2	2
4430.02	CAP, brake cylinder bleed screw	2	2	2
	KIT, repair :			
4449.05	standard, for cylinder diam. : 16 mm. ◀▶ 404,404A8,404C	2		
4449.06	reduced, for cylinder diam. : 16 mm. ◀▶ 404,404A8,404C	2		
4449.07	standard, for cylinder diam. : 17.5 mm. ◀▶ 404L,404U6A	2		
4449.08	reduced, for cylinder diam. : 17.5 mm. ◀▶ 404L,404U6A	2		
4449.09	standard, for cylinder diam. : 19 mm. ◀▶		2	
4449.10	reduced, for cylinder diam. : 19 mm. ◀▶		2	
4449.13	standard, for cylinder diam. : 20.6 mm. ⟼| 404LXC5:7.120.350;LXC6:6.864.000 and all column « C »			2
4449.14	reduced, for cylinder diam. : 20.6 mm. ⟼| 404LXC5:7.120.350;LXC6:6.864.000 and all column « C »			2
4449.19	standard for cylinder diam. : 20.6 mm. ⟼ 404XC5:7.120.350; LXC6:6.864.000			2
4449.20	reduced for cylinder diam. : 20.6 mm. ⟼ 404XC5:7.120.350; LXC6:6.864.000			2

Printed in France

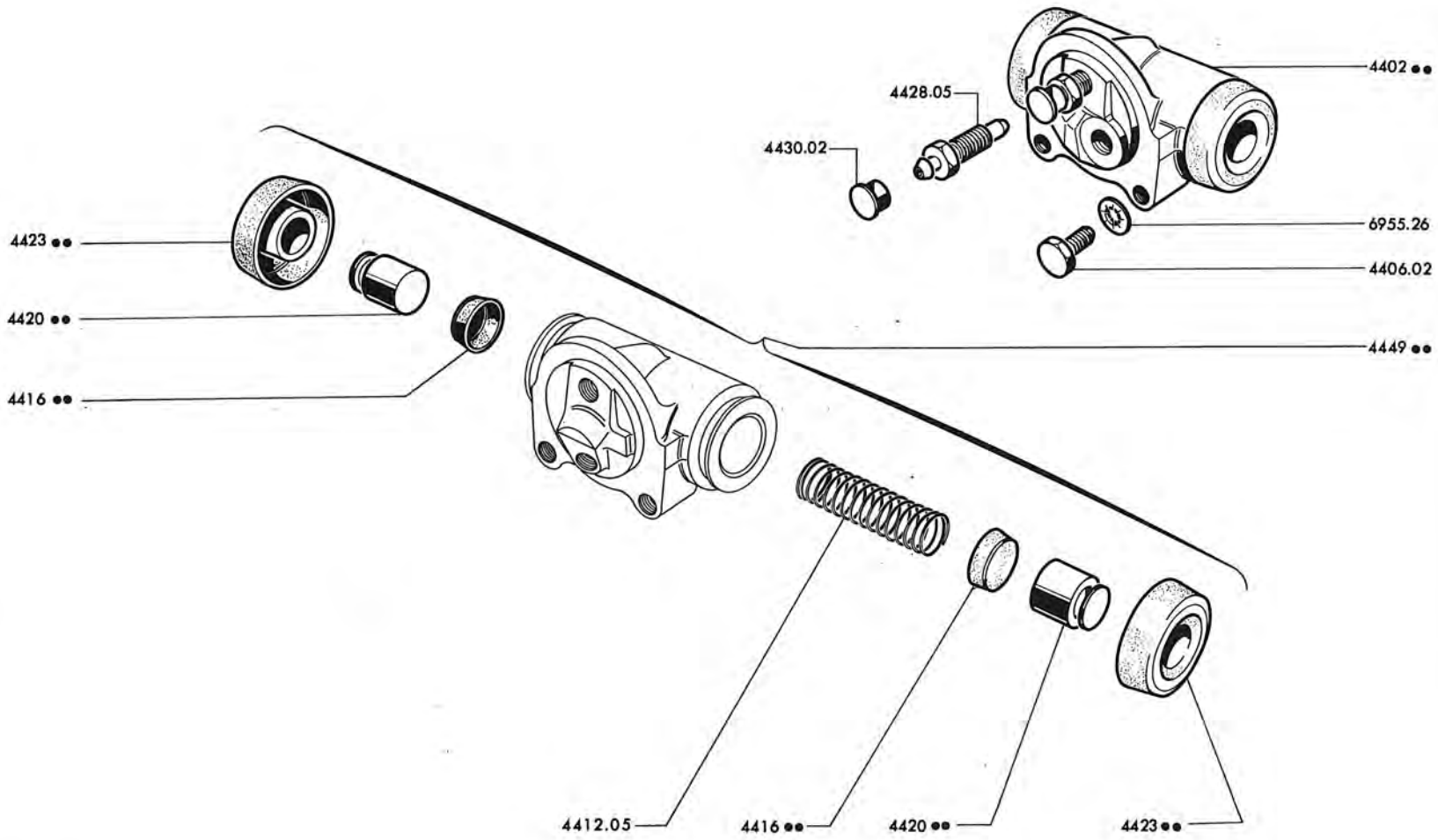

Printed in France

441 - 404

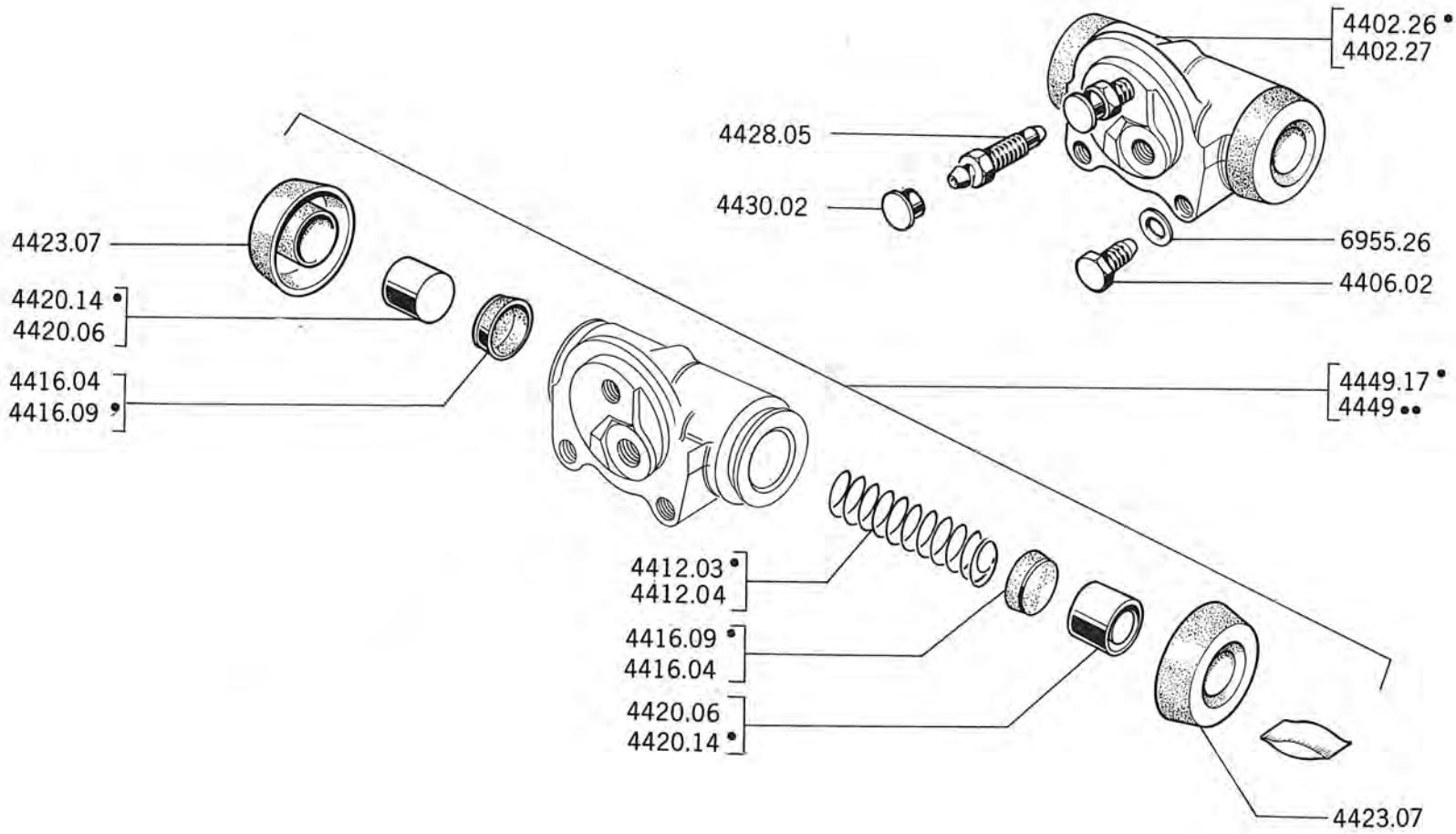

Printed in France

A – 404,404 (USA),404/8 ⟼ 1968 Motor-Show ⟶ 404XC5:5.073.004;XC6:5.530.711,8.261.666; (USA):8.350.928,8.353.680;404/8:6.907.574 ..... A
B – ⟼ 404XC5:5.073.004;XC6:5.530.711,8.261.666; (USA):8.350.928,8.353.680;404/8:6.907.574 ..... B

	CYLINDER, brake, rear :		
4402.24	◀▶, diam. : 22 mm.	1	
4402.25	◀▶, diam. : 22 mm.	1	
4402.26	◀▶, diam. : 23.8 mm.		1
4402.27	◀▶, diam. : 23.8 mm.		1
4406.02	SCREW, 6 x 12 mm.	4	4
4412.03	SPRING		2
4412.04	SPRING	2	
	CUP, rubber :		
4416.04		4	
4416.09			4
	PISTON :		
4420.06		4	
4420.14			4
4423.07	BOOT, rubber	4	4
4428.05	SCREW, bleed	2	2
4430.02	CAP, bleed screw	2	2
	KIT, repair :		
4449.04	reduced, for cylinder diam. : 22 mm.	*2*	
4449.16	standard, for cylinder diam. : 22 mm.		
4449.17	standard, for cylinder diam. : 23.8 mm.		*2*
4449.18	reduced, for cylinder diam. : 23.8 mm.		

404 (USA) and 404/8 ↦ 1967 → 1968 Motor-Show

4400.21	CALIPER, assy. ◄	Fit 1 brake pad kit 4245.35, 2 retaining pins 4243.07, 2 clips 4244.01	1
4400.22	CALIPER, assy. ◄		1
4405.07	SCREW, 12 x 34 mm.		4
4415.12	RING, sealing, rubber, 48.4 x 54.4 x 3.2 mm, inner piston		2
4415.13	RING, sealing, rubber, 34.2 x 40.2 x 3.2 mm., outer piston		4
4419.15	PISTON, inner, Ø 48.1 mm.		2
4419.16	PISTON, outer, Ø 33.9 mm.		4
4423.11	COVER, dust, rubber, outer piston		2
4428.06	SCREW, bleed, 3/8"		2
4430.03	CAP, rubber		2
4435.10	PIPE, bridge, ◄		1
4435.11	PIPE, bridge, ◄		1
4437.05	GASKET, 9.7 x 15.6 x 2 mm.		2
4438.05	UNION, adjustable		2
4442.02	GASKET, 12.3 x 16 x 1.2 mm.		2
4443.02	SCREW-UNION		1
4448.17	***KIT, repair***		2

Printed in France

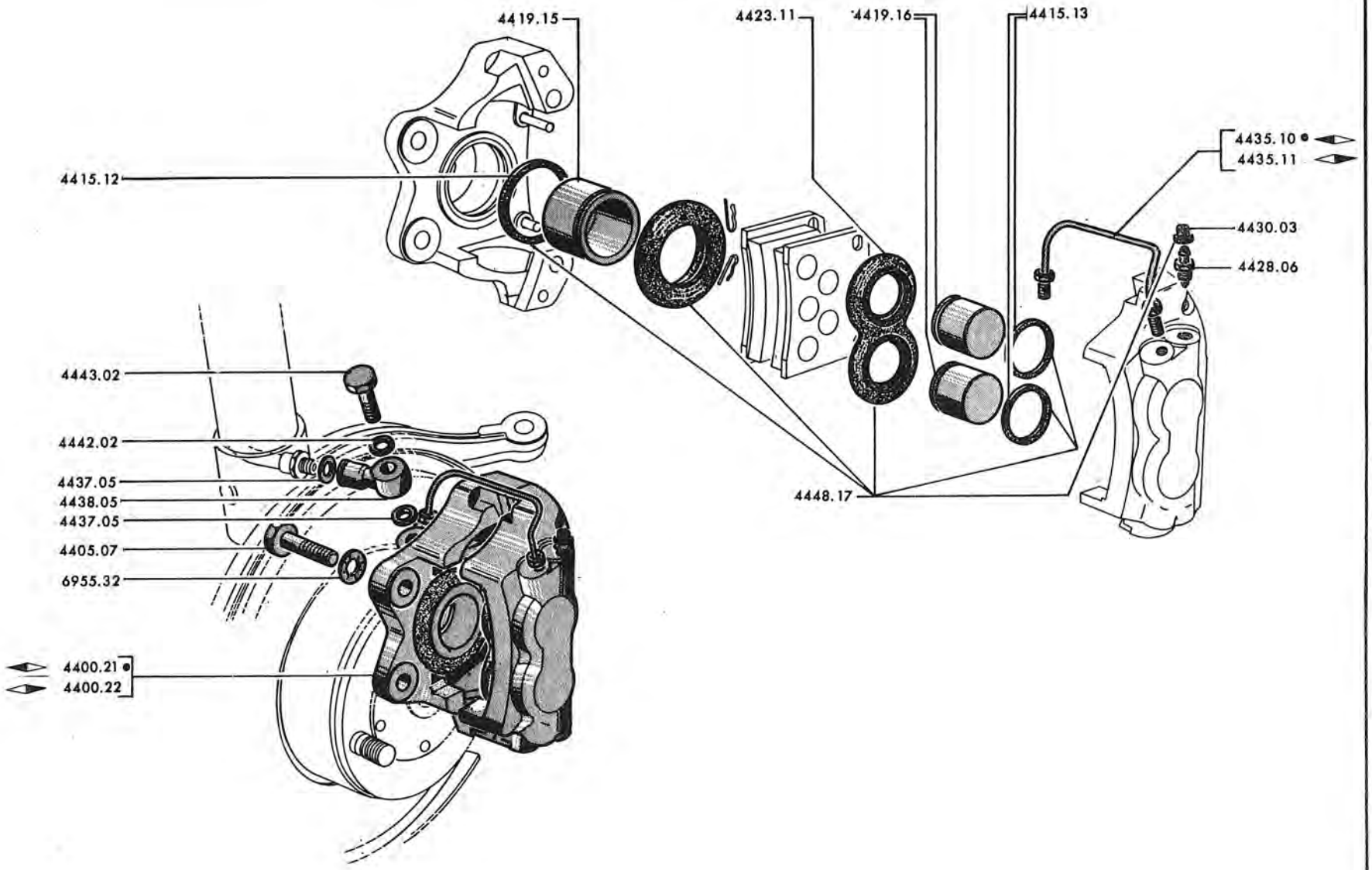

Printed in France

404,404 USA , 404/8 and → 1968 Motor-Show

4400,27	CALIPER, assy., ◀▷	Fit brake pad kit 4245.39	1
4400.28	CALIPER, assy., ◁▶		1
4415.16	RING, sealing rubber, brake piston		4
4419.20	PISTON, Ø 48 mm.		4
4423.19	COVER, dust, rubber		4
4426.07	SNAP-RING		4
4428.05	SCREW, bleed		2
4430.02	CAP, bleed screw		2
4437.05	GASKET, 9.7 x 15.6 x 2 mm.		2
4438.05	UNION, adjustable		2
4442.02	GASKET, 12.3 x 16 x 1.2 mm.		2
4443.02	SCREW-UNION		1
	KIT, repair :		
4448.21	standard		2
4448.22	reduced		2

Printed in France

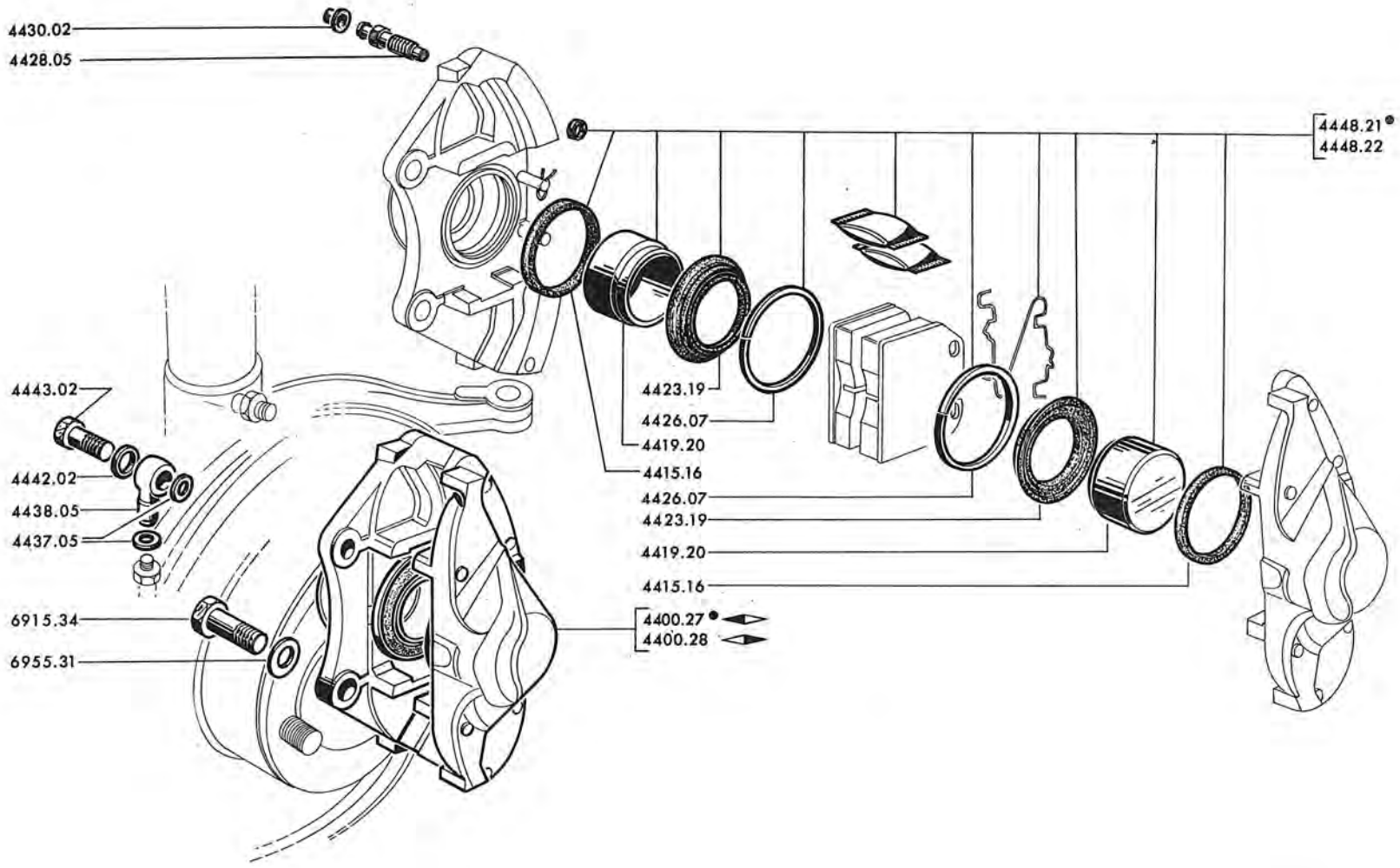

Printed in France

45 A - 404

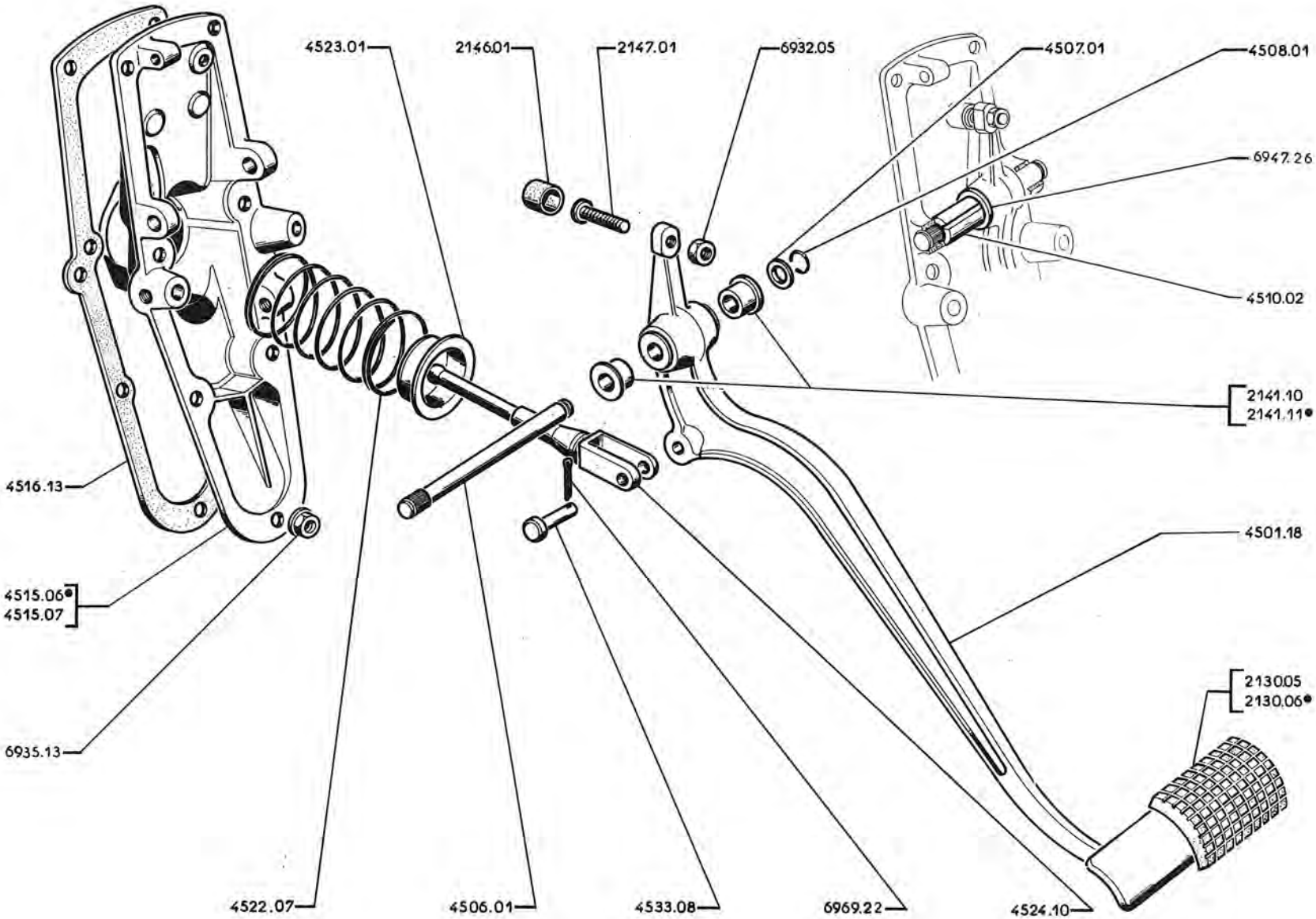

Printed in France

Passengers' Room	Pedal Bushings	APPLICABILITY	
Regular	«Clevite»	→I 404:4.267.777,4.525.117,4.550.078;C:4.495.623,4.590.387;L:4.825.067; LD:4.975.004;U6:4.701.016;U6D:4.900.218	A
	«Rilsan»	I→ 404:4.267.777,4.525.117,4.550.078;DA:3.060.000, C:4.495.623,4.590.387;L:4.825.067;LD:4.975.004;U6:4.701.016; U6D:4.900.218;U6A:1.920.000 .. →I 4.399.083,4.527.033,4.556.165,3.060.632,4.497.121,4.592.234, 4.838.000,4.977.068,4.720.000,4.904.201,1.921.000	B

4501.18	PEDAL, brake, assy., with bushings (fit clutch pedal 2127.18 for column «A») (moreover fit rubber pad 2130.06 →I 404:4.001.650)	1	1
2130.05	PAD, rubber, brake pedal (length:66 mm.) (→I 404:4.001.650)	1	
2130.06	PAD, rubber, brake pedal (length:74 mm.) (I→ 404:4.001.650, 4.500.000, 4.550.000; all 404DA,C,L,LD,U6, U6D, U6A)	1	1
4506.01	SHAFT, brake and clutch pedals	1	1
4507.01	WASHER, stop, 14.5 x 22 x 2 mm., pedals shaft	1	1
4510.02	SPACER (fit washer 6947.26 →I 404 Coupler : 4.525.117)	1	1
4508.01	RING, stop, Ø 11.5 mm., pedals shaft	1	1
2141.10	BUSHING, clevite, 14 x 16.2 x 12 mm., brake pedal	2	
2141.11	BUSHING, rilsan, 14 x 16.2 x 15 mm., brake pedal		2
2146.01	BUFFER, rubber	1	1
2147.01	SCREW, adjusting, 7 x 31 mm., brake pedal buffer	1	1
	PEDAL-SUPPORT, (◠•):		
4515.06	mechanical clutch	1	1
4515.07	Coupler	1	1
4516.13	GASKET, rubber	1	1
4519.02	(See 84AB)		
4521.01	(See 24GH)		
4522.07	SPRING, return	1	1
4523.01	CUP, return spring	1	1
4524.10	PUSH-ROD, brake master cylinder	1	1
4533.08	PIN, 8 x 25 mm., master cylinder push-rod	1	1

Passengers' Room Increased

(Rilsan Bushings)

A – ↦ 404XC5TW:4.399.083;XC6TW:5.075.000,4.527.033,4.556.165;A8:1.910.000;DA:3.060.632 D:4.600.000;C:4.497.121,4.592.234;LXC5TW:4.838.000;LXC6TW:4.940.000;LD:4.977.068; U6:4.720.000;U6D:4.904.200;U6A:1.921.000 ⟶| 5.070.411,5.078.518;4.535.000, 4.570.000,1.910.000,3.060.687,4.623.496,4.498.000,4.594.000,4.899.243,4.940.697, 4.985.175,4.767.754,4.915.719,1.925.000

B – ↦ 404XC5TW:5.070.411;XC6TW:5.078.518;D:4.623.496;LXC5TW:4.899.243;LXC6TW:4.940.697 LD:4.985.175;U6:4.767.754;U6D:4.915.719 ⟶| 1967 Motor-Show

		A	B
4501.20	PEDAL, brake, with bushings	1	1
4501.21	PEDAL, brake, with bushings	1	1
2130.06	PAD, rubber, length : 74 mm.	1	1
4506.01	SHAFT, pedals ⟶| 404:5.064.051,4.535.000,4.570.000;A8:1.910.100;	1	
4507.01	WASHER, stop, 14.5 x 22 x 2 mm. D:4.614.313;C:4.498.000,4.594.000;L:4.896.980;	1	
	LD:4.982.420;U6:4.755.012;U6D:4.912.139;		
4508.01	RING, stop, ⌀ 11.5 mm. U6A:1.925.000; all 404DA	1	
4506.04	SHAFT, pedals ↦ 404XC5:5.064.051;D:4.614.313;LXC5:4.896.980;LD:4.982.420; U6:4.755.012;U6D:4.912.139; all 404XC6,404LXC6)	1	1
4510.02	SPACER (404 Coupler)	1	
2141.11	BUSHING, rilsan, 14 x 16.2 x 15 mm.	2	2
2146.01	BUFFER, rubber	1	1
2147.01	SCREW, adjusting, 7 x 31 mm.	1	1
	PEDALS-SUPPORT :		
4515.18	Coupler	1	
4515.19	Coupler	1	
4515.21	mechanical clutch	1	1
4515.22	mechanical clutch	1	1
4516.15	GASKET, rubber	1	
4516.17	GASKET, rubber		1
4522.07	SPRING, return	1	1
4523.01	CUP, return spring	1	1
4524.10	PUSH-ROD, brake master cylinder	1	1
4533.08	PIN, clevis, 8 x 25 mm., master cylinder push-rod	1	1

Printed in France

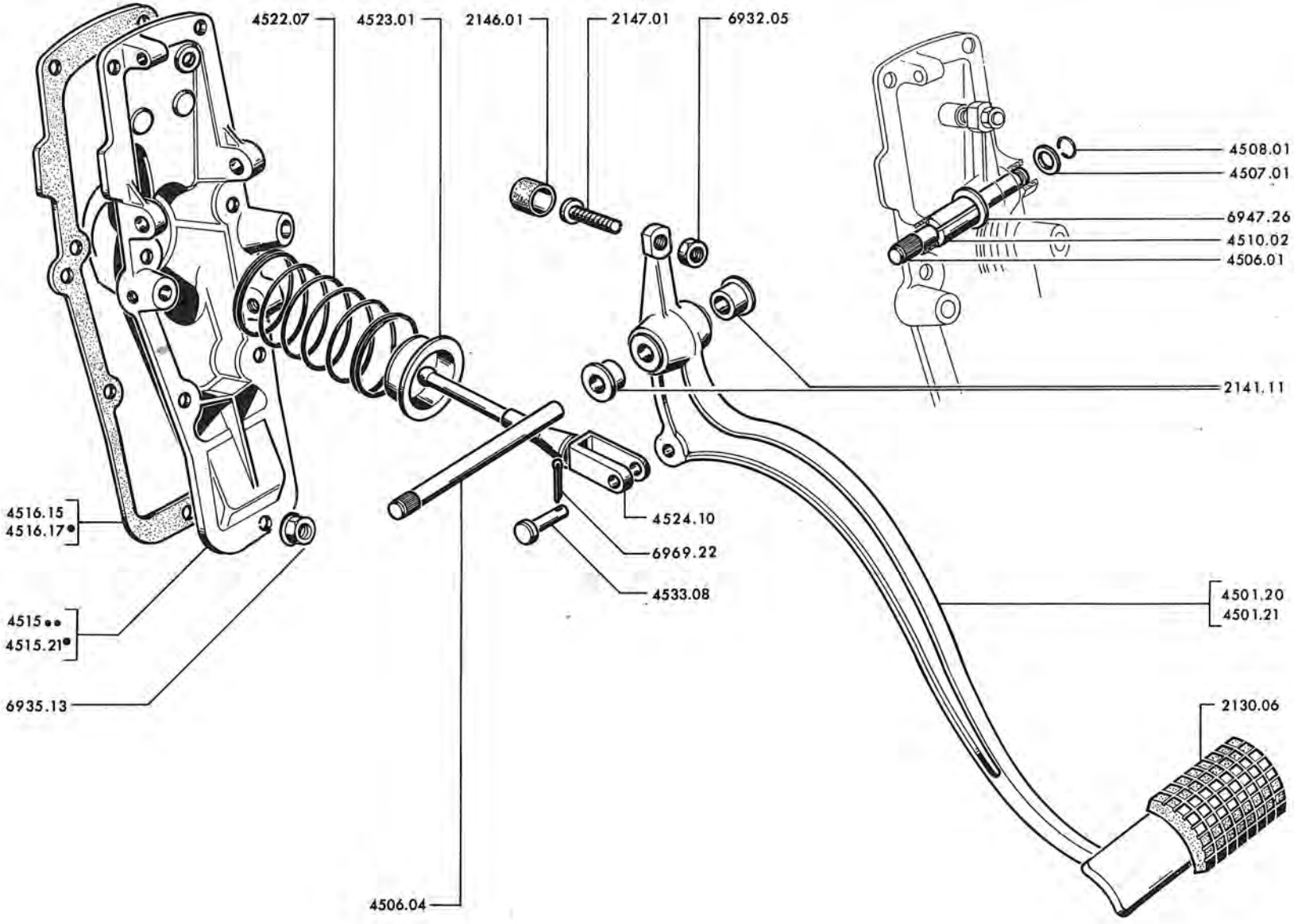
4522.07
4523.01
2146.01
2147.01
6932.05
4508.01
4507.01
6947.26
4510.02
4506.01
2141.11
4516.15
4516.17●
4524.10
6969.22
4533.08
4515●●
4515.21●
6935.13
4501.20
4501.21
2130.06
4506.04

45 E -404

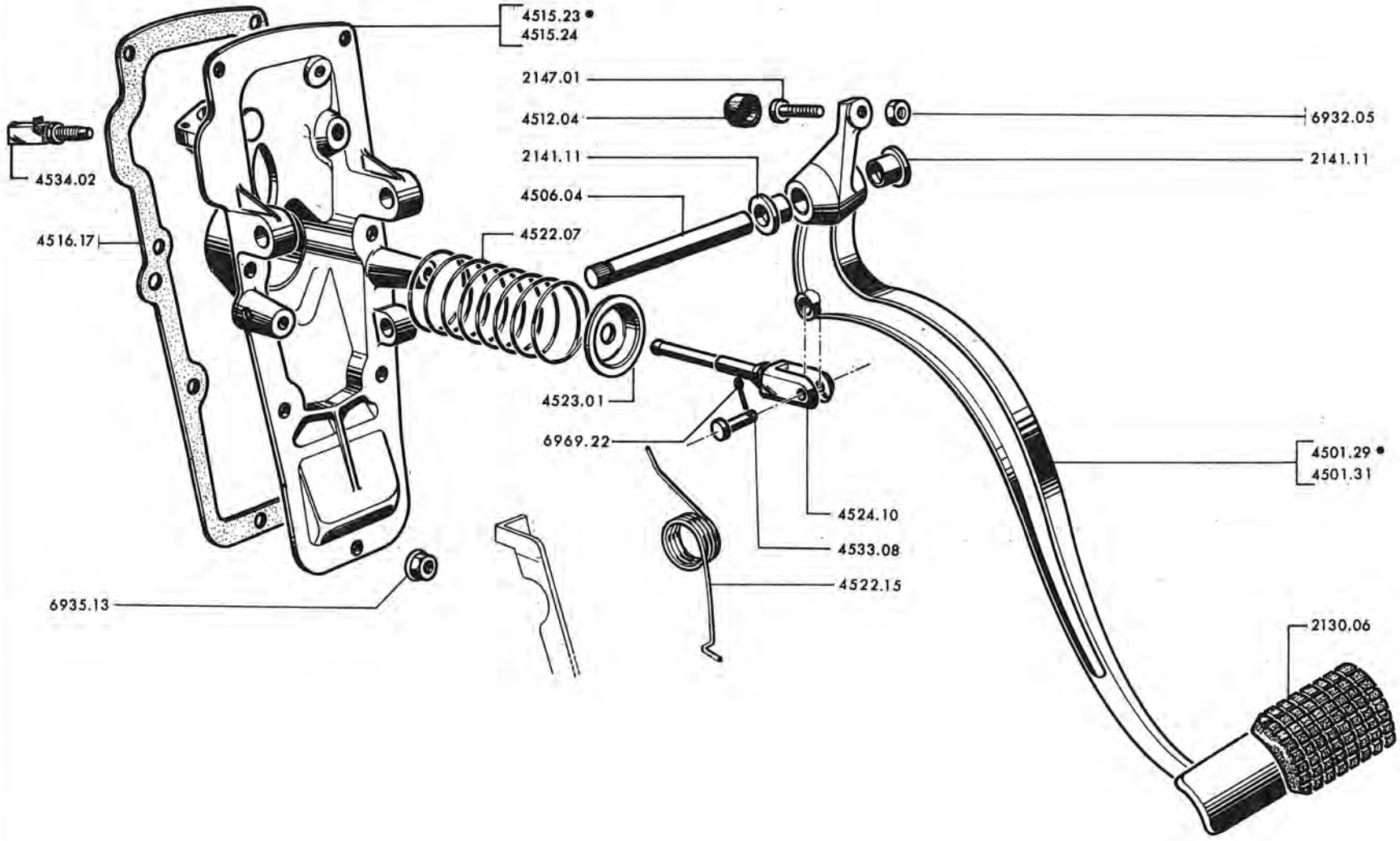

Printed in France

↦ 404XC5TW:5.071.600;XC6TW:5.085.000;404/8 :6.980.000 →| 1968 Motor-Show and ↦ 404D: 4.629.000;LXC5TW:7.000.100;LXC6TW:4.941.600;LD:4.986.700;U6:4.774.000;U6D:4.917.500; U6A (USA) :1.932.300;7.100.100;U8:7.010.000;U8D:7.040.000; U10:7.060.000;U10D:7.080.000 and all 404U6S,U7

2130.06	PAD, rubber, brake pedal, length : 74 mm.	1
4501.29	PEDAL, brake-with bushings, assy.	1
4501.31	PEDAL, brake-with bushings, assy.	1
4506.04	SHAFT, brake pedal	1
2141.11	BUSHING, rilsan, 14 x 16.2 x 15 mm.	2
4512.04	BUFFER (See 21 EF)	1
2147.01	SCREW, adjusting, 7 x 31 mm.	1
4515.23	PEDALS-SUPPORT	1
4515.24	PEDALS-SUPPORT	1
4516.17	GASKET, rubber	1
4522.07	SPRING, return, brake pedal	1
4522.15	SPRING, return, brake pedal travel warning light (Sweden) 404D,U10,U10D ↦ 1972 Motor-Show	1
4523.01	CUP	1
4524.10	ROD, push, brake master cylinder	1
4533.08	PIN, clevis, 8 x 25 mm., brake master cylinder push-rod	1
4534.02	SWITCH :	
	– stop-lights	1
	– brake pedal travel warning ligth (Sweden) (404D,U10,U10D ↦ 1972 Motor-Show)	1

Passengers' Room Increased (Rilsan Bushings)	Transmission : Conventional C3 → 1967 Motor-Show (Early Type Gear Layout) and Transmission : Automatic → 1967 Motor-Show

PEDAL, brake, with bushings :

4501.20	except Auto-Trans.	1
4501.21	except Auto-Trans.	1
4501.25	Auto-Trans.	1
1604.05	PAD, rubber, length : 104 mm. (Auto-Trans.)	1
2130.06	PAD, rubber, length : 74 mm. (except Auto-Trans.)	1
4506.01	SHAFT, pedal → 404XC5:5.232.736,8.206.142;A8:1.910.280 (approx.);C:4.499.050,4.598.133;LXC5:4.870.665; U6A:1.926.638; all 404 Coupler (except Auto-Trans.)	1
4507.01	WASHER, stop. 14.5 x 22 x 2 mm.	1
4508.01	RING, stop, Ø 11,5 mm.	1
4506.04	SHAFT, pedal (→ 404XC5:5.232.736;XC6:5.311.007,8.206.142;A8:1.910.280 (approx.); C:4.499.050,4.598.133;LXC5:4.870.665;LXC6:4.884.000;U6A;1.926.638; all 404 Auto-Trans. (except Coupler)	1
4510.02	SPACER Coupler	1
	SPACER Auto-Trans.	1
2141.11	BUSHING, rilsan, 14 x 16.2 x 15 mm.	2
2146.01	BUFFER, rubber	1
2147.03	SCREW, adjusting, 7 x 34 mm.	1

PEDALS-SUPPORT :

4515.18	Coupler	1
4515.19	Coupler	1
4515.21	mechanical clutch and Auto-Trans.	1
4515.22	mechanical clutch and Auto-Trans.	1

GASKET, rubber :

4516.15	→ 404XC5:5.307.932;XC6:5.352.612,8.253.642,8.234.168; (USA) 5.352.612,8.253.642; A8:1.910.382;C:4.499.859,6.800.752;LXC5:4.882.275;LXC6:4.890.187;U6:1.929.141; all 404 Coupler	1
4516.17	→ 404XC5:5.307.932;XC6:5.352.612,8.253.642,8.234.168; (USA) :5.352.612,8.253.642; A8:1.910.382;C:4.499.859,6.800.752;LXC5:4.882.275;LXC6:4.890.187;U6:1.929.141,7.100.100	1
4522.07	SPRING, return	1
4523.01	CUP, return spring	1
4524.11	ROD, push, brake master cylinder	1
4533.08	PIN, clevis, 8 x 25 mm., brake master cylinder push-rod	1

Printed in France

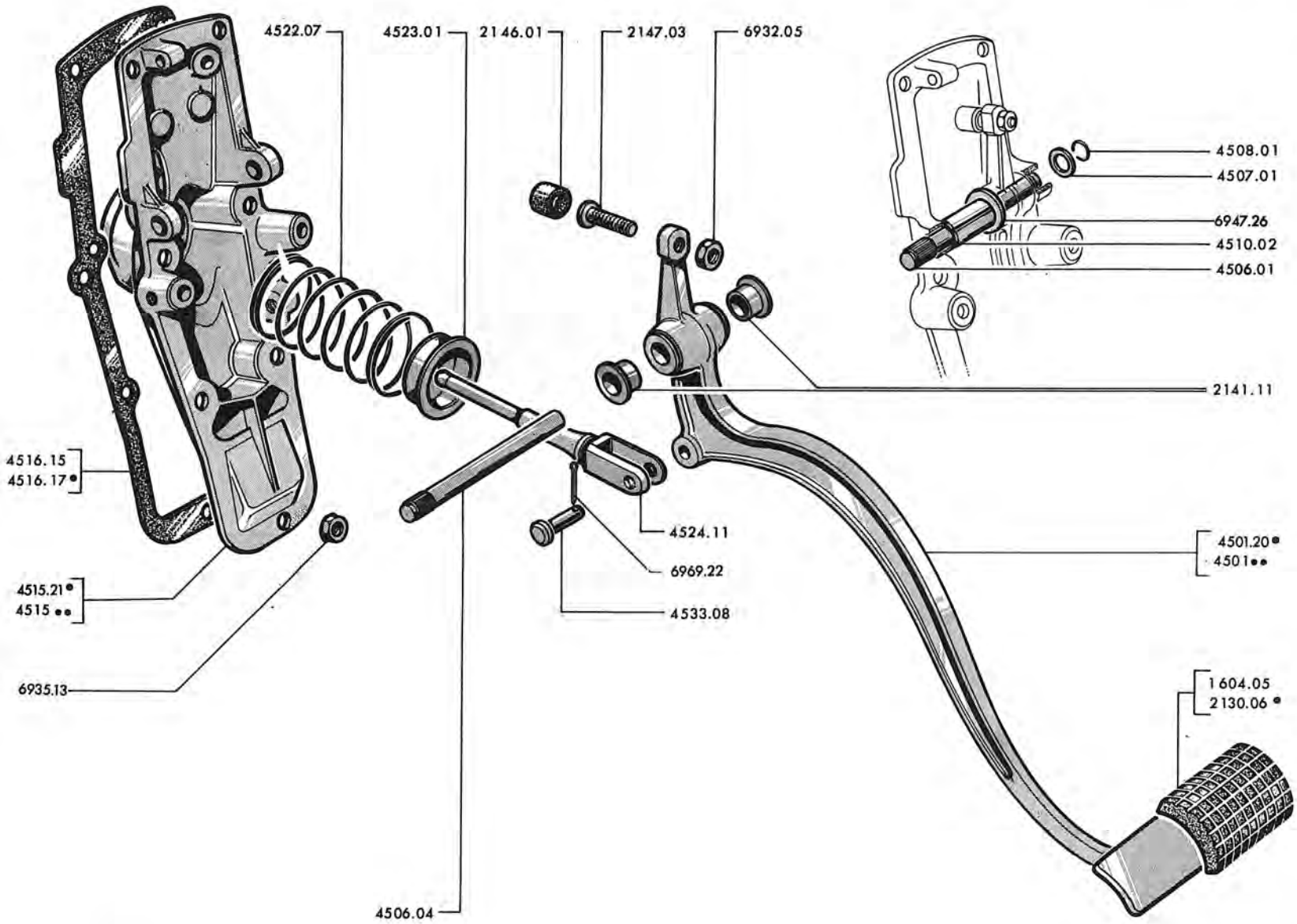
4522.07
4523.01
2146.01
2147.03
6932.05
4508.01
4507.01
6947.26
4510.02
4506.01
2141.11
4516.15
4516.17 •
4515.21 •
4515 ••
6935.13
4524.11
6969.22
4533.08
4501.20 •
4501 ••
1604.05
2130.06 •
4506.04

45 I - 404

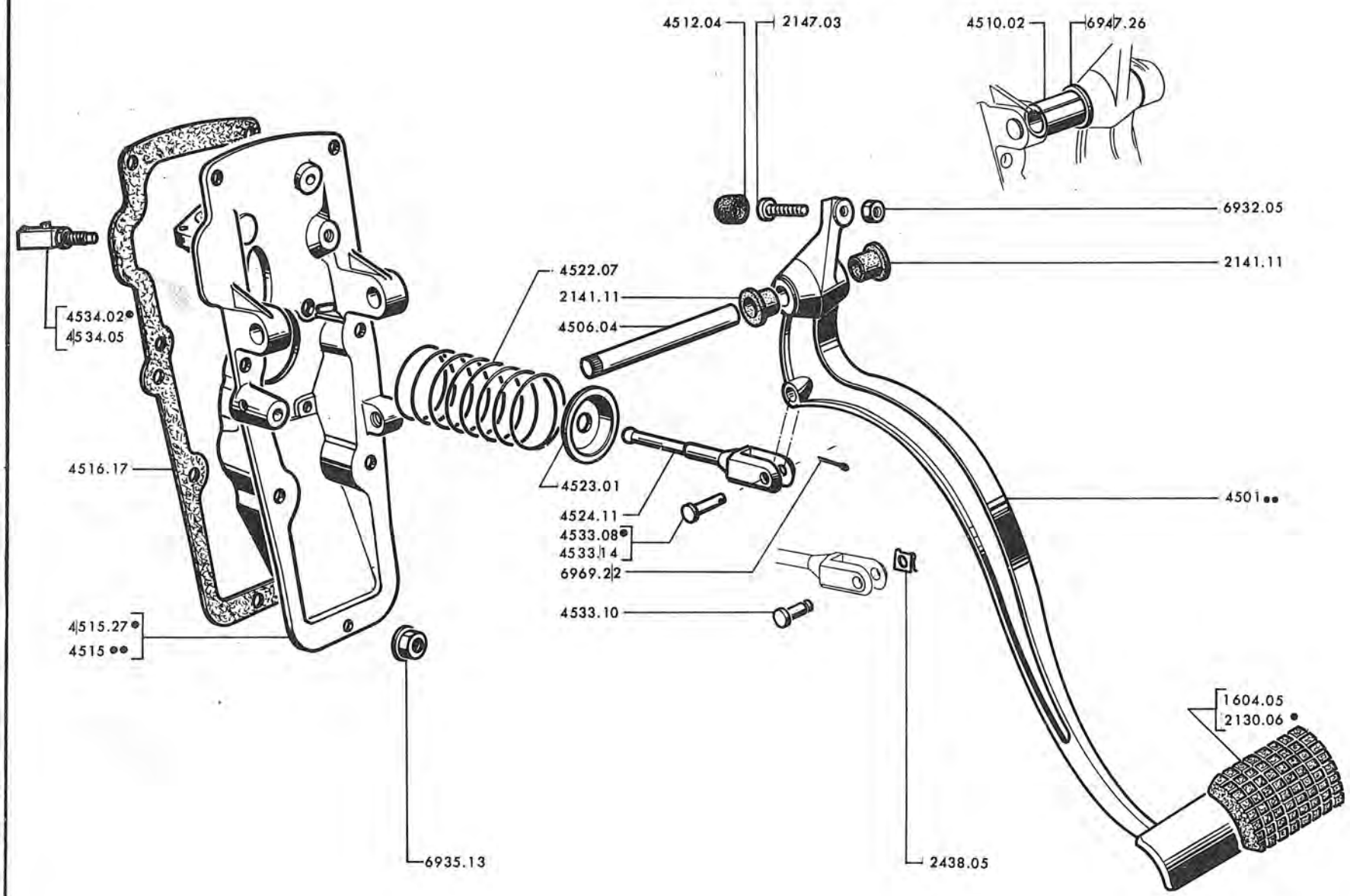

Printed in France

BRAKES – BRAKE PEDAL (Assisted Brakes) (TRANSMISSION : CONVENTIONAL BA7 AND AUTOMATIC)

BRAKE ASSISTANCE THROUGH :		404 XC5	404 XC6	404 Auto-Trans.	404 Injection	404 (USA) Standard Trans.	404 (USA) Auto-Trans.	404/8	404 C	404 C Injection	404 L XC5	404 L XC6	404U6A (Except USA) Standard Trans.	404U6A (Except USA) Auto-Trans.	
Hydrovac	→	5.308.500	5.415.000	8.256.600	8.243.000 8.250.000 8.300.000		8.324.500	6.906.200	4.670.200	6.801.500	4.882.600	6.826.000	1.932.300	7.100.100	A
	→	5.309.500	5.504.800	8.259.900	8.303.300		8.352.700		4.671.100	6.803.500					
Mastervac	→	5.072.600	5.504.800	8.259.900		8.325.000	8.352.700	6.900.000							C
													A	B	

PEDAL, brake, WITH BUSHINGS :

4501.29	(Except Auto-Trans.)	1	
4501.30	(Auto-Trans. → 1968 Motor-Show)	1	
4501.31		1	
4501.33	(Except Auto-Trans.)		1
4501.36	(Auto-Trans.)		1
1604.05	PAD, rubber, length : 104 mm. (Auto-Trans.)	1	1
2130.06	PAD, rubber, length : 74 mm. (Except Auto-Trans.)	1	1
4506.04	SHAFT, pedal	1	1
4510.02	SPACER (Auto-Trans.)	1	1
2141.11	BUSHING, rilsan, 14 x 16.2 x 15 mm.	2	2
4512.04	BUFFER, rubber	1	
2147.03	SCREW, adjusting, 7 x 34 mm. (Except 404/8)	1	1

PEDALS-SUPPORT :

4515.23	(Except Auto-Trans and U6A Auto-Trans. → 1969 Motor-Show)	1	
4515.24	(Except Auto-Trans.)	1	
4515.25	(Auto-Trans.) All Sedan and U6A → 1969 Motor-Show	1	
4515.27			1
4516.17	GASKET, rubber	1	1
4522.07	SPRING, return, brake pedal	1	
4522.14	SPRING, return, brake pedal travel warning light (Sweden → 1972 Motor-Show)	1	
4523.01	CUP	1	
4524.11	ROD, push	1	
4533.08	PIN, clevis, 8 x 25 mm., master-cylinder push-rod	1	
4533.10	PIN, 8 x 20.5 mm., master-cylinder push-rod		1
2438.05	CLIP, spring, push-rod yoke pin		1
4534.02	SWITCH, stop-lights	1	1
4534.05	SWITCH, stop-lights, inverted, with nut (404 Sweden → 1972 Motor-Show)		1
4533.14	PIN, 8 x 16.6 mm., master-cylinder push-rod		1

Hydrovac-Unit w/o vacuum reservoir		404	404 Coupler	404 Injection	404A8	404C	404C Injection
	→	5.100.000	4.535.000	4.570.000	1.910.100	4.498.000	4.594.000
	→|	5.129.373	4.535.239	4.575.647	1.910.110	4.498.343	4.595.134

Exchange	New		
4535.04	4535.23	HYDROVAC-UNIT Ass., w/o stop-lights switch (Fit residual pressure valve 4543.06, cap 4540.06, vacuum reservoir 4546.04, valve 4575.04, screw-union 4571.01, gasket 4610.01, gasket 4442.01, 2 rubber tubes 4572.15, rubber tube 4572.09, clamp 6982.18	1
	4608.06	SWITCH, stop-lights	1
	7518.19	PLUG, plastic, obturating : – Hydrovac attachment hole on front left fender inner frame (Diesel)	3
		– Hydrovac piping passage on dashboard (Diesel)	1
	4540.06	CAP, residual pressure valve	1
	4654.01	GASKET, copper, 22.5 x 26.2 x 1.2 mm.	1
	4543.06	VALVE, residual pressure, assy.	1
	4544.03	ELEMENT, filtering	1
	4544.04	SCREEN	1
	4544.05	SNAP-RING	1
	4545.02	CONTACTOR, manometric, (take off clip 6540.14)	1
	4572.15	TUBE, fabric-covered rubber, air depression intake : 9,5 x 17 x 1000 mm. (cut to required length)	1
	6547.08	STRAP, vinyl-chloride	1
	4575.04	VALVE, air depression inlet, on Hydrovac	1
	4576.01	GROMMET, rubber, - seal -, air depression valve	1
		HOSE, flexible, master cylinder to Hydrovac-Unit	
	4580.01	length 270 mm.	1
	4806.12	length 373 mm. (carburettor)	1
	4808.02	NUT, coupling, 5/8", Hydrovac hose and pipe	1
	4580.04	PIPE, 3.34 x 4.76 x 840 mm., master-cylinder to Hydrovac hose	1
	4824.08	SCREW-UNION, 3/8", master-cylinder to Hydrovac hose pipe	2
	4582.01	BRACKET, Hydrovac hose and pipe - on dashboard	1
	4609.06	UNION, adjustable, brakes general feed hose	1
	4610.01	GASKET, 13 x 21 x 1.2 mm., brakes general feed hose union, on Hydrovac	1
	4442.01	GASKET, 15 x 21 x 1.2 mm., brakes general feed hose union to stop-lights switch	1
	4437.05	GASKET, 9.7 x 15.6 x 2 mm., Hydrovac hose on [master-cylinder union	1
		[Hydrovac	1
	4599.04	KIT, repair	1

Printed in France

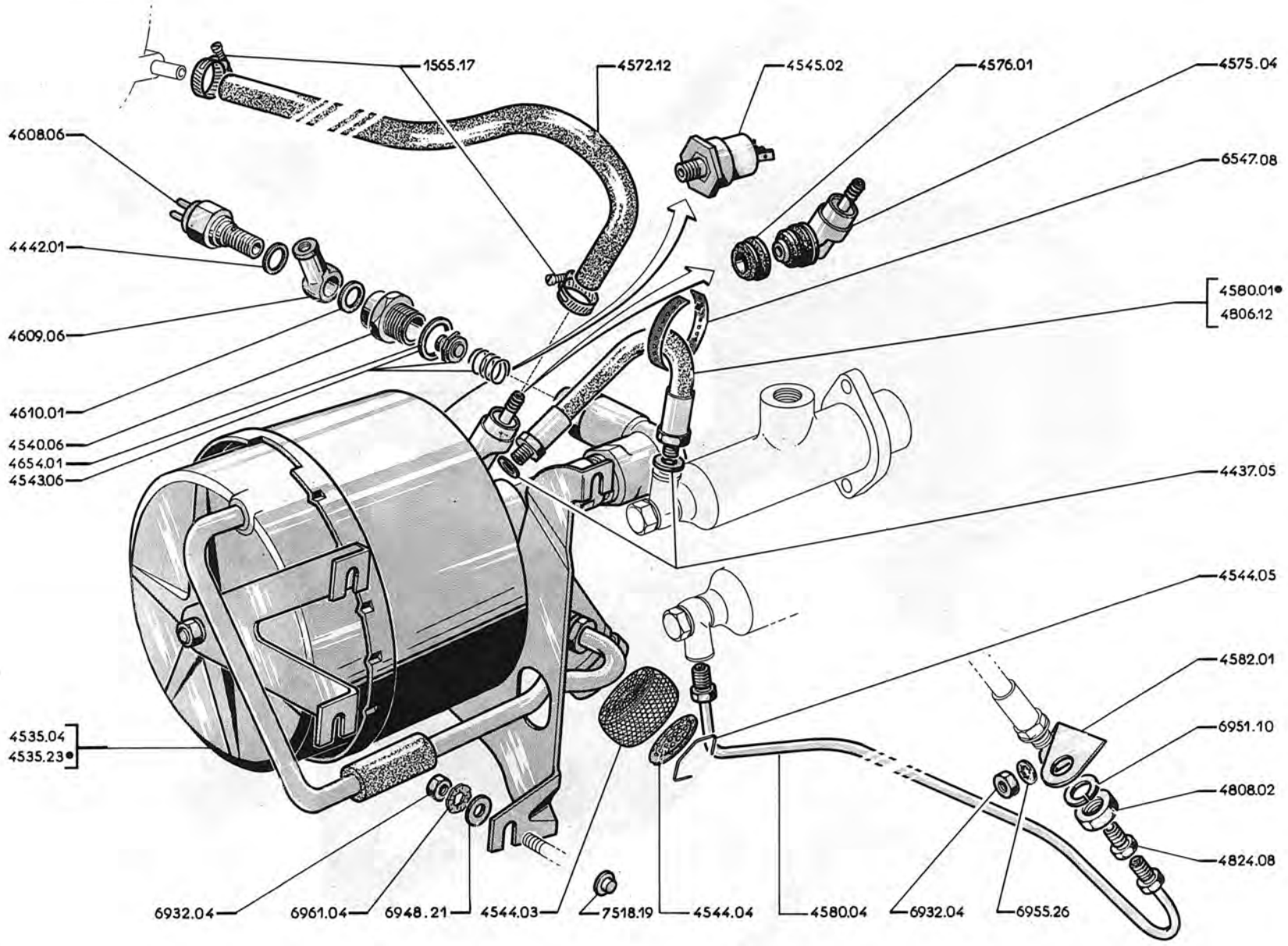
1565.17
4572.12
4545.02
4576.01
4575.04
4608.06
6547.08
4442.01
4580.01●
4806.12
4609.06
4610.01
4540.06
4654.01
4543.06
4437.05
4544.05
4582.01
4535.04
4535.23●
6951.10
4808.02
4824.08
6932.04
6961.04
6948.21
4544.03
7518.19
4544.04
4580.04
6932.04
6955.26

45 M - 404

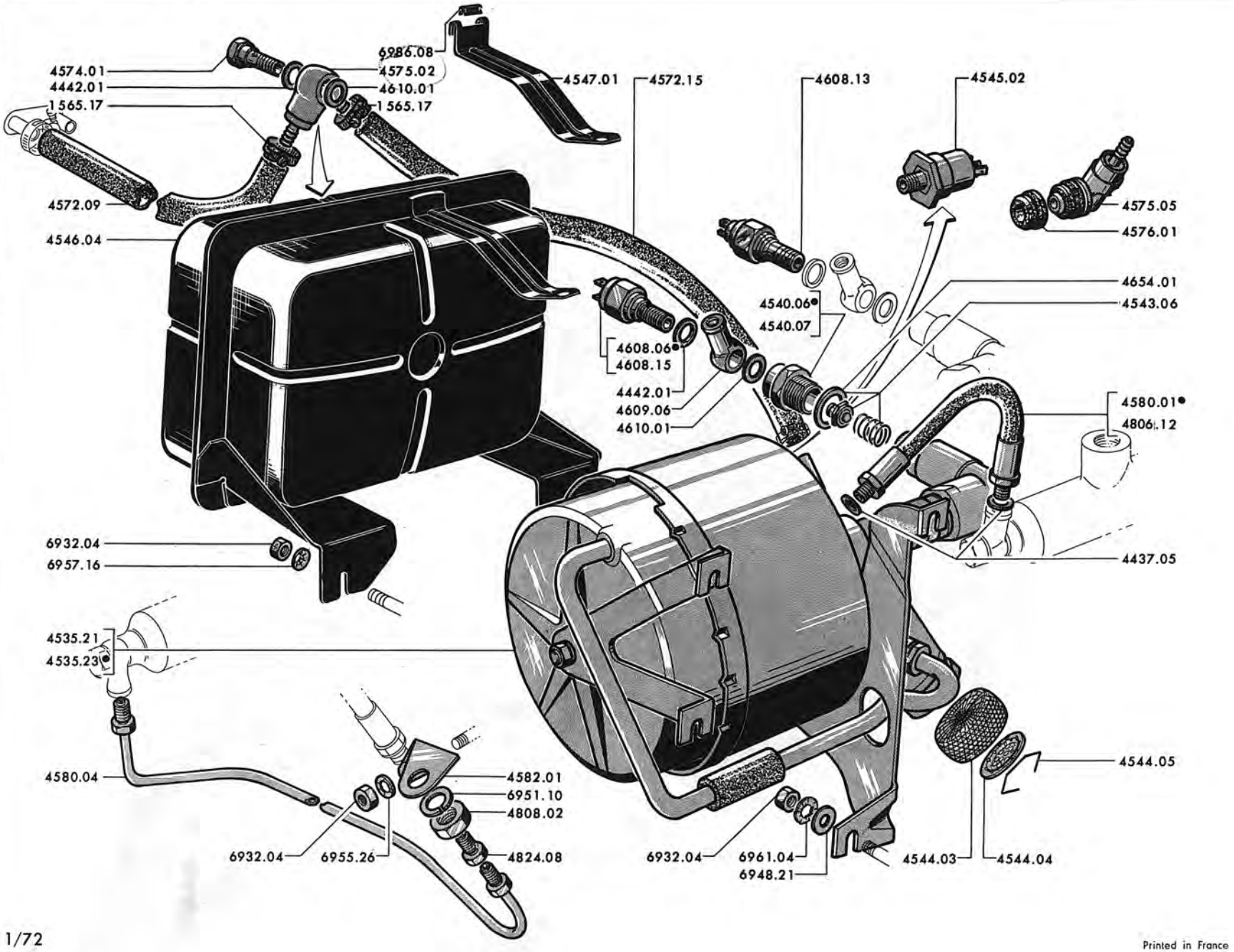

Printed in France

With vacuum reservoir															
	404		404 Coupler	404 Auto-Trans.	404 Injection	404 (USA)		404 A8	404 C	404 C Injection	404 L		404 U6A		
	XC5	XC6				Standard Trans.	Auto. Trans.				XC5	XC6	Standard Trans.	Auto-Trans.	
→I	5.129.373		4.535.239	8.250.000	4.575.647 4.590.000 8.200.000	5.129.373	8.250.000	1.910.110	4.498.343	4.595.134	4.855.000		1.925.000		
→I	5.307.700		4.537.191	8.251.300	8.224.862	5.307.700	8.251.300	1.910.357	4.499.500	4.599.271	4.882.100		1.928.100		A
→I	5.307.700	5.311.007		8.251.300	8.224.862	5.307.700	8.251.300	1.910.357	4.499.500 4.500.000 4.670.000	4.599.271 4.600.000 6.800.000	4.882.100	4.884.000 4.895.000 6.820.000	1.928.100	7.100.000	
→I	5.308.500	5.415.000		8.256.600	8.243.000	5.415.000	8.256.600	1.910.500	4.670.200	6.801.500	4.882.600	6.826.000	1.932.300	7.100.100	B
→I	5.308.500 5.309.500	5.415.000 5.504.800		8.256.600 8.259.900	8.243.000 8.303.300				4.670.200 4.671.100	6.801.500 6.803.500	4.882.600	6.826.000	1.932.300 Except (USA)	7.100.100	C

Exchange	New		A	B	C
4535.21	4535.23	HYDROVAC-UNIT ASSY. (fit 1 valve 4543.06, 1 cap 4540.06 for column «A» and «B» or 1 cap 4540.07 for column «C»; moreover remove the safety contactor flat terminal for column «A»)	1	1	1
	4608.06	SWITCH, stop-lights	1		
	4608.13	SWITCH, stop-lights (D) (fit 1 terminal 6540.15 and take off the union →I 404:5.278.990 and all vehicles column «A»)	1	1	
	4608.15	SWITCH, stop-lights		1	
	4540.06	CAP, residual pressure valve	1	1	
	4540.07	CAP, residual pressure valve			1
	4654.01	GASKET, copper, 22.5 x 26.2 x 1.2 mm.	1	1	1
	4543.06	VALVE, residual pressure, assy.	1	1	1
	4544.03	ELEMENT, filtering	1	1	1
	4544.04	SCREEN	1	1	1
	4544.05	SNAP-RING	1	1	1
	4545.02	CONTACTOR, manometric (take off the flat terminal for column «A»)	1	1	1
	4546.04	RESERVOIR, vacuum (for 404 Coupler, adapt the fixation of the brake fluid tank)	1	1	1
	4547.01	LUG, attaching, upper, vacuum reservoir (→I 404XC5:5.307.831;XC6:5.334.463, 8.252.491,8.229.329;A8:1.910.383;C:4.499.671,4.599.816;LXC5:4.882.156;LXC6: 4.887.992;U6A:1.928.828)	1	1	
	4572.09	TUBE, fabric-covered rubber 9.5 x 17 x 380 mm., intake manifold	1	1	1
	4572.15	TUBE, fabric-covered rubber 9.5 x 17 x 1000 mm., vacuum reservoir (cut to required length).	1	1	1
	4574.01	SCREW-UNION, air depression valve	1	1	1
	4575.02	VALVE, air depression inlet, on vacuum reservoir	1	1	1
	4575.05	FITTING, air depression inlet - on Hydrovac, with gasket, (Pre-series vehicles)	1		
	4576.01	GROMMET, rubber - seal - air depression inlet fitting, (Pre-Series vehicles)	1		
	4580.01	HOSE, flexible : – length : 270 mm. (Carburettor) and Injection] master-cylinder			
	4806.12	HOSE, flexible : – length : 373 mm. (Carburettor)] to Hydrovac-Unit	1	1	1
	4808.02	NUT, coupling, 5/8", Hydrovac hose and pipe	1	1	1
	4580.04	PIPE, 3.34 x 4.76 x 840 mm., master-cylinder to Hydrovac hose	1	1	1
	4824.08	SCREW-UNION, 3/8", master-cylinder to Hydrovac hose pipe	2	2	2
	4582.01	BRACKET, Hydrovac hose and pipe - on dashboard	1	1	1
	4609.06	UNION, adjustable, brakes general feed hose	1	1	
	4610.01	GASKET, 13 x 21 x 1.2 mm. : – brakes general feed hose union, on Hydrovac	1	1	
		– air depression inlet valve on vacuum reservoir	1	1	1
	4442.01	GASKET, 15 x 21 x 1.2 mm. : – stop-lights switch, on Hydrovac	1	1	
		– air depression inlet valve on vacuum reservoir	1	1	1
	4437.05	GASKET, 9.7 x 15.6 x 2 mm., Hydrovac hose on : – master-cylinder union	1	1	1
		– Hydrovac	1	1	1
	4599.04	***KIT, repair***	1	1	1

MASTERVAC	A – 404 (USA), 404/8 ⊢► 1967 ►⊣ 1968 Motor-Show ..... A
	B – 404 (USA) ⊢► 1968 Motor-Show 404, 404/8 ◠ ⊢► 1968 Motor-Show ..... B
HYDROVAC	C – 404, 404/8 ◠ ⊢► 1968 Motor-Show C

	MASTERVAC-UNIT, assy. :			
4535.18	404/8	1		
4535.20	404 (USA)	1		
4535.33	Except (USA); (CH), Norway, Sweden ►⊣ 1971 Motor-Show	1		
4535.34	(USA); (CH), Norway, Sweden ⊢► 1971 Motor-Show	1		
4535.27	HYDROVAC-UNIT, assy.			1
	GASKET, rubber :			
4536.01	.....	1		
4536.02	.....	1	1	
4536.03	.....		1	
4537.01	SUPPORT, assy.	1		
4537.03	SUPPORT, assy.		1	
4572.09	TUBE, fabric-covered rubber, 9.5 x 17 x 380 mm.	1	1	
4572.15	TUBE, fabric-covered rubber, 9.5 x 17 x 1000 mm. (Cut to required length) :			
	– on air depression inlet valve			1
	– intake manifold to non-return valve ..... ►⊣ 404XC7:5.621.174; Auto-Trans.:8.268.500 and all other types	1	1	
4575.08	VALVE, non-return, on Mastervac to intake manifold rubber tube ..... ►⊣ 404XC7:5.621.174; Auto-Trans.:8.268.500 and all other types	1	1	
4575.06	VALVE, depression intake	1	1	1
4576.01	GROMMET, rubber	1	1	
4576.02	CAP, protecting, rubber			1
4577.01	BOOT, protecting, rubber	1	1	
4806.12	HOSE, flexible, length : 373 mm.			1
4808.02	NUT, 5/8"			1
4824.08	SCREW-UNION, 3/8"			2
4580.04	PIPE, 3,34 x 4,76 x 840 mm. (404/8)			1
4582.01	BRACKET (404/8)			1
4437.05	GASKET, 9.7 x 15.6 x 2 mm. :			
	– on mastervac-cylinder union			1
	– on Hydrovac			1
4599.05	***KIT,*** repair (Hydrovac)			1

Printed in France

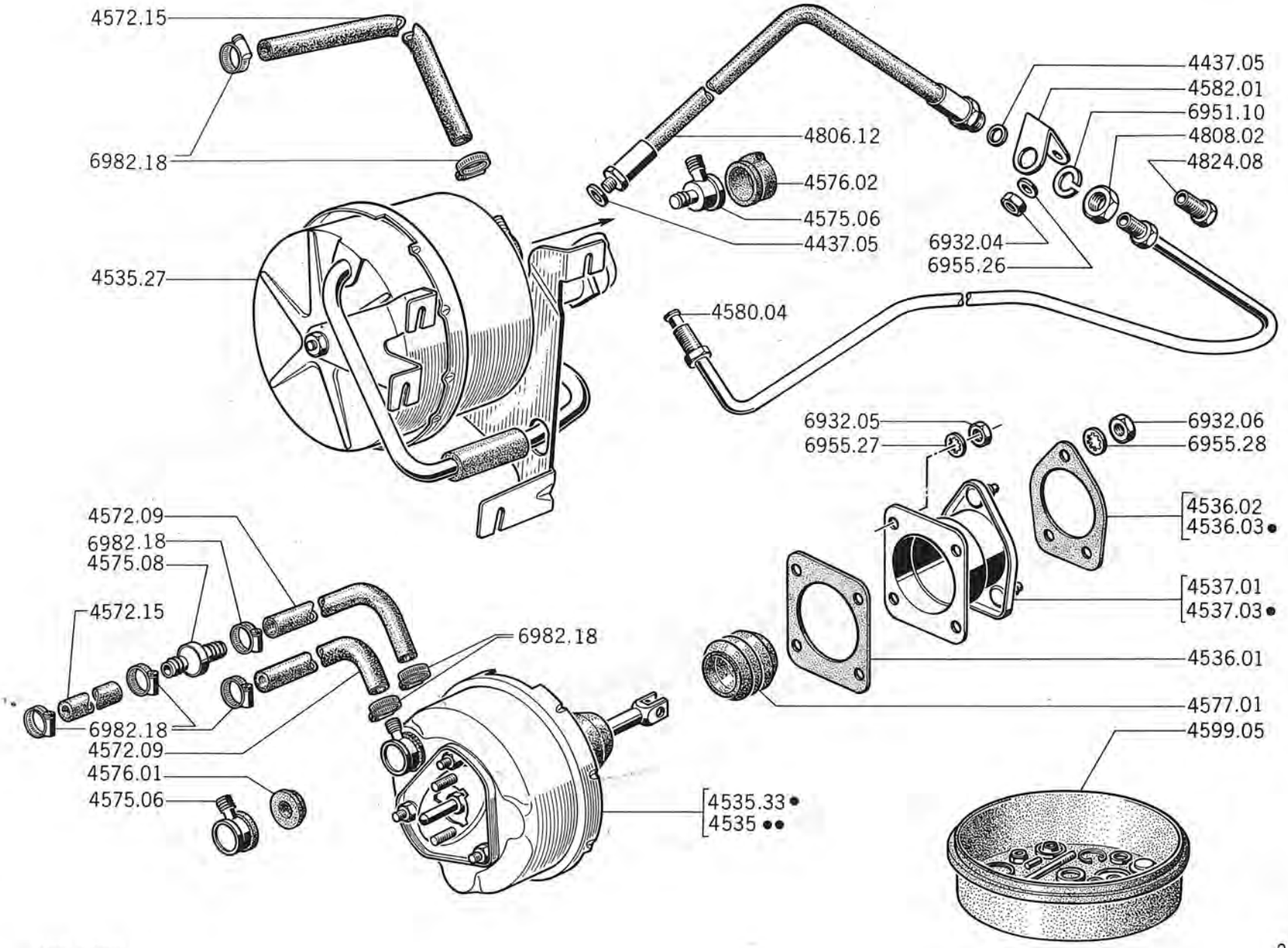
4572.15
6982.18
4535.27
4806.12
4576.02
4575.06
4437.05
4437.05
4582.01
6951.10
4808.02
4824.08
6932.04
6955.26
4580.04
6932.05
6955.27
6932.06
6955.28
4536.02
4536.03•
4537.01
4537.03•
4536.01
4577.01
4599.05
4572.09
6982.18
4575.08
4572.15
6982.18
6982.18
4572.09
4576.01
4575.06
4535.33•
4535 ••

46 A - 404

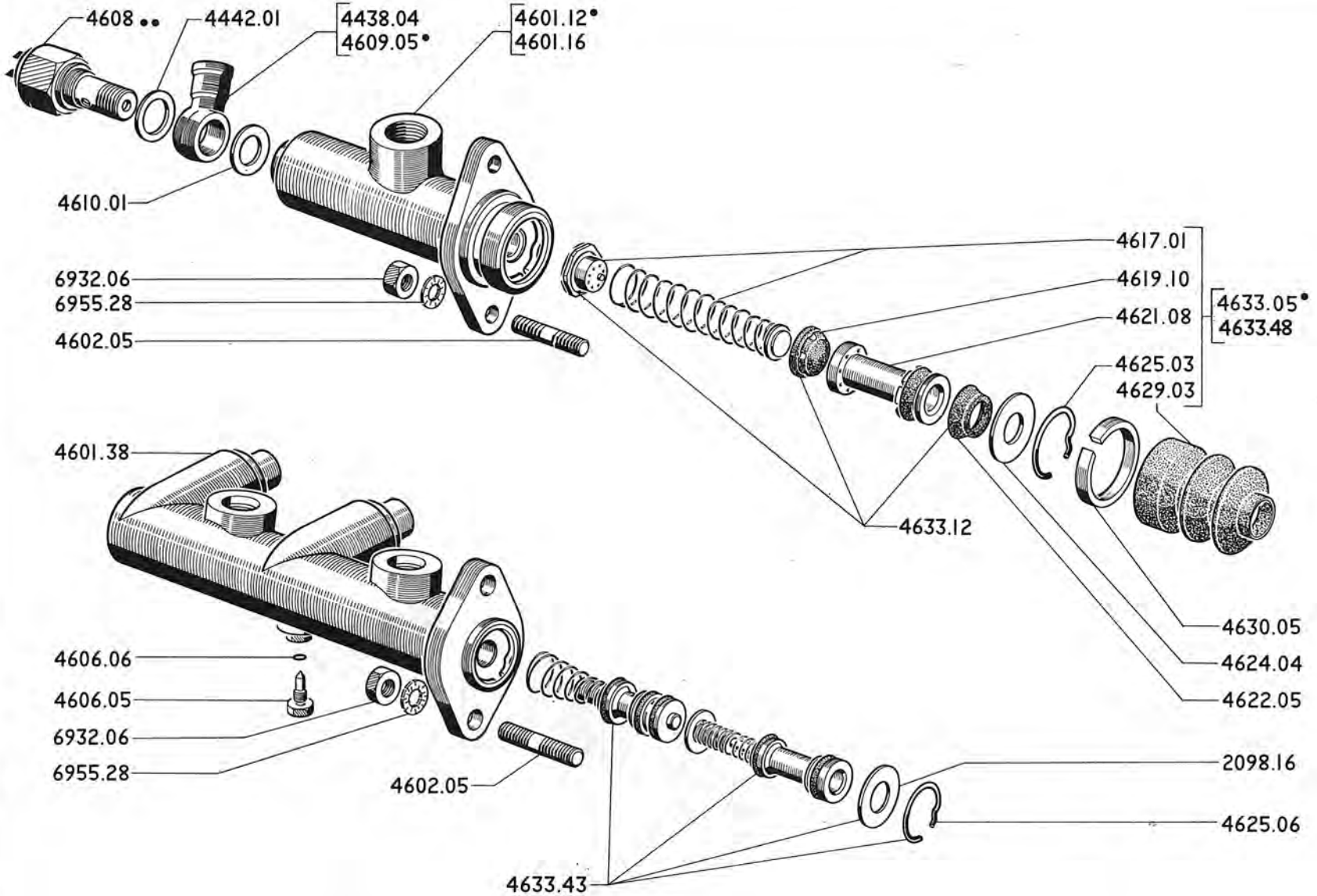

Printed in France

		A	B
	A – Single Circuit	A	
	B – Dual Circuit (Diesel : Sweden, Norway, (CH) ↦ 1971 Motor-Show)		B
	MASTER-CYLINDER Ø 22 mm.:		
4601.12	All 404, 404 A8, 404/8, 404 D ◠•; 404 C and 404 D ◠ ↦ 4.641.600	1	
4601.16	All 404 DA and 404 D ◠ →| 4.641.600	1	
4601.38	Tandem type		1
4602.05	STUD, 8 x 15 x 19 mm	2	2
4606.05	SCREW, pistons stop		1
4606.06	GASKET, rubber, 4.9 x 1.9 mm		1
	SWITCH, stop lights :		
4608.03	stud terminal type (→| 404:4.106.410, 4.504.011)		
4608.06	snap-on terminal type : ↦ 404:4.106.410; D:4.600.000 →| 1966 Motor-Show ↦ 404 Coupler:4.504.011, 4.550.000; all 404A8,DA,C, (See 45 KL, 45 MN)		
4608.13	flat terminal type ((D) :404 XC5, XC6, D →| 1967 Motor-Show; all 404 Coupler, Injection,A8,DA,C) (fit 2 terminals 6540.15 and remove the union →| 404 XC5: 5.070.000; D:4.619.852; all 404 Coupler, Injection,A8,DA,C) (See 45 MN)	1	
4608.15	flat terminal type (404XC5, XC6, D ↦ 1966 →| 1967 Motor-Show (See 45 MN)		
4534.02	(See 45 EF)		
	UNION, adjustable :		
4438.04	→| 404:5.057.592, 4.530.001, 4.570.000; D:4.609.342 and 404 A 8, DA, C	1	
4609.05	↦ 404:5.057.592, 4.530.001; D:4.609.342	1	
4442.01	GASKET, 15 x 21 x 1.2 mm	1	
4610.01	GASKET, 13 x 21 x 1.2 mm. (See 22 IJ, 45 KL, 45 MN)	1	
4617.01	VALVE and SPRING ASSY.	1	
4619.10	CUP, rubber, main	1	
4621.08	PISTON, with secondary cup	1	
4622.05	CUP, rubber, secondary	1	
4624.04	WASHER, thrust	1	
2098.16	WASHER, thrust		1
4625.03	RING, lock	1	
4625.06	RING, lock		1
4629.03	BOOT, rubber	1	
4630.05	COLLAR	1	
	KIT, repair :		
4633.05	***standard***	1	
4633.12	***reduced (Lockheed)***	1	
4633.43	***standard***		1
4633.48	***reduced (Stop)***	1	

SEDI SHOP

Master-Cylinder Ø 1 " (25.4mm.)			
	Single Circuit	End outlet	A – All 404LXC5, LXC6, U6, U7, U8, U10 and →I 404U6A:1.925.000 All Diesel and →I 1968 Motor-Show (approx.)
		RH side outlet	B – All Diesel →I 1968 Motor-Show (approx.)
	Dual Circuit		C – →I 404U6A (USA):1.932.300, 7.100.100; all 404 U10, U10D

		A	B	C
	MASTER-CYLINDER :			
4601.11		1	1	
4601.26	tandem type			1
4602.05	STUD, attaching, 8 x 15 x 19 mm.	2	2	2
4606.05	SCREW, stop, secondary piston			1
4606.06	GASKET, rubber, 4.9 x 1.9 mm.			1
4608.06	SWITCH, stop lights (→I 404L:4.898.900; LD:4.984.110; U6:4.763.170; U6D:4.914.547; U6A:1.925.000)	1	1	
4608.07	SCREW, adjustable union (→ 1967 Motor-Show and all 404U8, U8D, U10, U10D)	1	1	
4608.13	SWITCH, stop-lights (D) (→I 1967 Motor-Show)(fit 2 terminals 6540.15 and remove the union →I 1966 Motor-Show)	1	1	
4608.15	SWITCH, stop-lights (→ 404LXC5:4.898.900; XC6:4.940.000; LD:4.984.110; U6:4.763.170; U6D:4.914.547; U6A:1.920.000 →I 7.000.100, 4.941.600, 4.986.700, 4.774.000, 4.917.500, 1.925.000)	1	1	
4438.04	UNION, adjustable (→I 404L:4.854.909; LD:4.981.019; U6:4.745.998; U6D:4.909.572; all 404 U6A column « A »)	1	1	
4609.05	UNION, adjustable (→ 404LXC5:4.854.909; LD:4.981.019; U6:4.745.998; U6D:4.909.572; all 404LXC6, 404U8, U8D, U10, U10D)	1	1	
4442.01	GASKET, 15 x 21 x 1.2 mm.	1	1	
4610.01	GASKET, 13 x 21 x 1.2 mm.	1	1	
4605.05	VALVE (Lockheed).	1		
4606.08	GASKET, copper, closing plug			1
4615.09	VALVE (Lockheed)		1	
2098.13	VALVE, assy.			1
4616.02	GASKET	1		
4617.02	VALVE and SPRING, assy.	1		
4618.07	SPRING (Lockheed)	1	1	
4619.03	CUP, rubber, main	1	1	
4621.09	PISTON, with secondary cup	1	1	
4622.03	CUP, rubber, secondary	1	1	
4624.03	WASHER, thrust	1	1	
4625.03	RING, lock	1	1	
4629.03	BOOT, rubber	1	1	
4630.05	COLLAR	1	1	
4654.01	GASKET, copper, 22.5 x 26.2 x 1.2 mm. (See 45 KL, 45 MN)			1
	KIT, repair :			
4633.01	***standard***	1		
4633.02	***reduced***			
4633.13	***standard***		1	
4633.14	***reduced***			
4633.32	***standard***			1

Printed in France

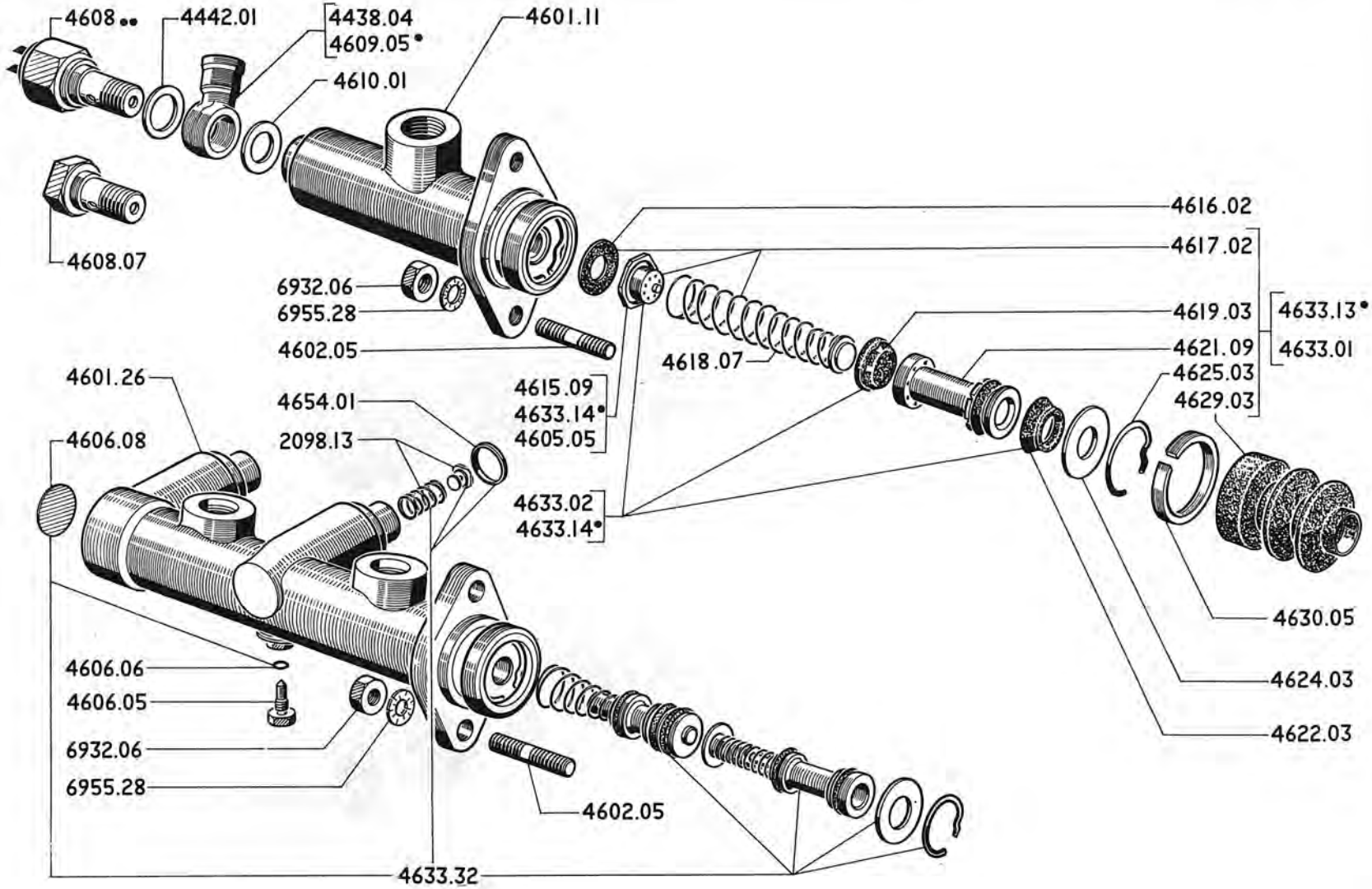
4608 ••
4442.01
4438.04
4609.05 •
4601.11
4610.01
4608.07
4616.02
4617.02
6932.06
6955.28
4619.03
4633.13 •
4633.01
4602.05
4621.09
4618.07
4625.03
4629.03
4601.26
4654.01
4615.09
4633.14 •
4605.05
4606.08
2098.13
4633.02
4633.14 •
4630.05
4624.03
4606.06
4606.05
6932.06
6955.28
4622.03
4602.05
4633.32

46 E - 404

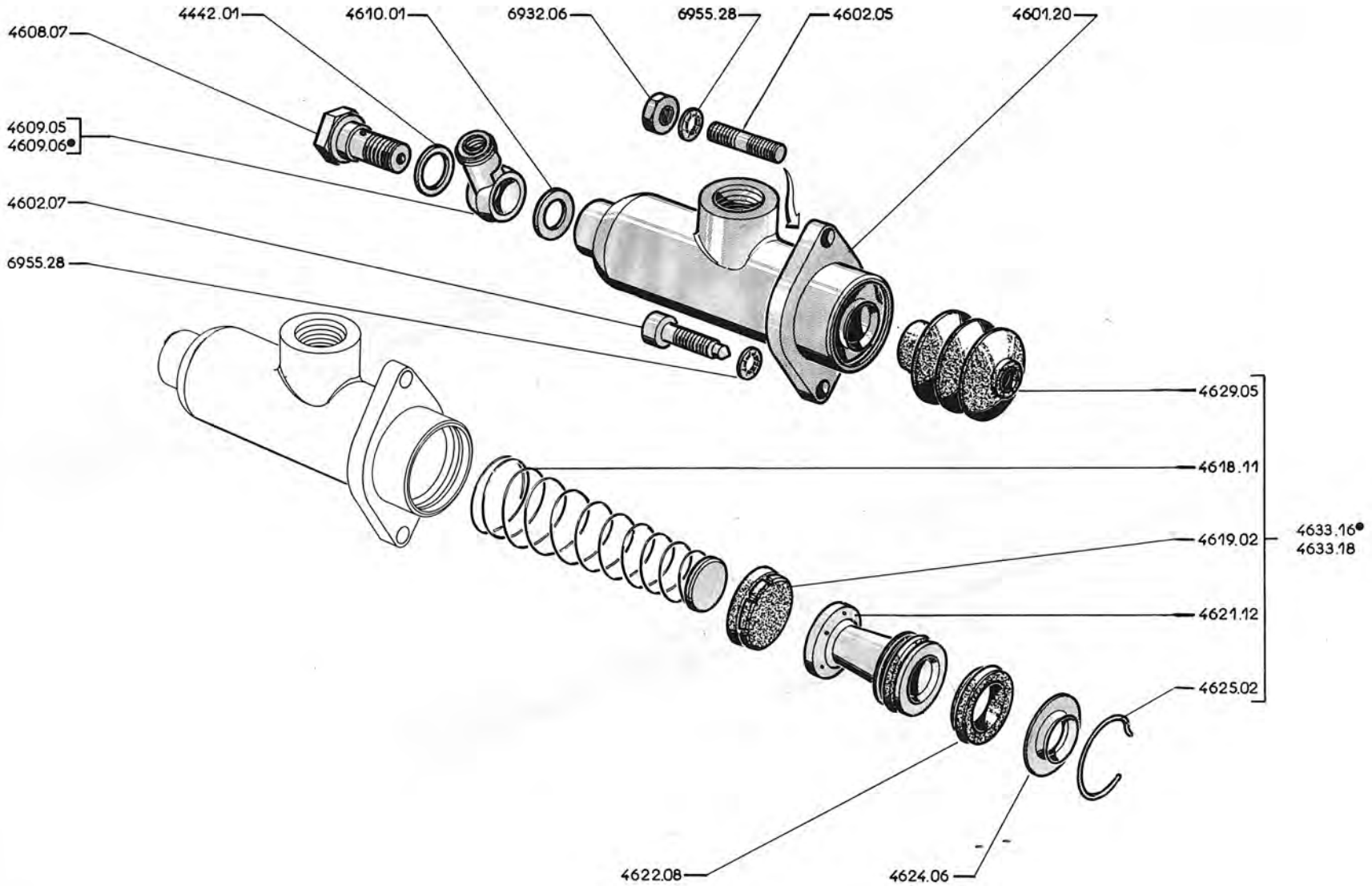

Printed in France

		404		404 Coupler	404 Auto-matique	404 Injection	404		404A8	404C	404 C Injection	404 L		404 U6A	
		XC5	XC6				Stand. Trans.	Auto-matique				XC5	XC6	Stand. Trans.	Auto-matique
Master-Cylinder Ø 1 1/4" (31.75mm.)	→	5.100.000	5.311.007	4.535.000	8.250.000	4.570.000	5.100.000	8.250.000	1.910.100	4.498.000	4.594.000	4.855.000	4.884.000	1.925.000	7.100.000
	→			4.537.191		4.590.000	5.415.000	8.256.600	1.910.525	4.500.000	4.600.000		4 895.000		
	→					8.200.000				4.670.000	6.800.000		6.820.000	(*)	(*)
	→					8.250.000				4.671.100	6.803.500				
	→					8.300.000									
	→	5.309.500	5.504.800		8.259.900	8.303.300									

4601.20	MASTER-CYLINDER	1
4602.05	STUD, 8 x 15 x 19 mm., brake master cylinder upper attachment	1
4602.07	SCREW, hex-socket head, 8 x 30 mm., brake master cylinder lower attachment	1
4608.07	SCREW, brake master cylinder union	1
4609.05	UNION, brake master cylinder ( )	1
4609.06	UNION, brake master cylinder ( ) (See 45 KL, 45 MN)	1
4442.01	GASKET, 15 x 21 x 1.2 mm.	1
4610.01	GASKET, 13 x 21 x 1.2 mm.	1
4618.11	SPRING	1
4619.02	CUP, main	1
4621.12	PISTON, with secondary cup	1
4622.08	CUP, secondary	1
4624.06	WASHER, thrust	1
4625.02	RING, lock	1
4629.05	BOOT, rubber	1
	KIT :	
4633.16	repair (Standard)]	1
4633.18	repair (Reduced)]	

(*) 404 U6A USA → 1.932.300, 7.100.100

MASTER-CYLINDER	Ø 19mm.	A – 404 (USA) ↦ 1967 Motor-Show; 404 (CH), Norway, Sweden ↦ 1971 Motor-Show .... A B – 404/8 ↦ 1967 ⇥ 1968 Motor-Show .... B C – 404, 404/8 ↦ 1968 ⇥ 1969 Motor-Show C
	Ø 22mm.	D – 404, 404/8 ↦ 1968 Motor-Show .... D
	Ø 19mm.	E – 404 ↦ 1969 Motor-Show; 404 (CH), Norway, Sweden ⇥ 1971 Motor-Show .... E

	MASTER-CYLINDER :							
4601.24						1		
4601.25	tandem type	1						
4601.29							1	
4601.31					1			1
4602.05	STUD, 8 x 15 x 19 mm.	2	1	1	1	1		
4606.05	SCREW, stop	1						
4606.06	GASKET 4,9 x 1,9 mm.	1						
2098.16	WASHER 14 x 24 x 2 mm.	1						1
4820.14	UNION, adjustable	1						
4442.02	GASKET, 12.3 x 16 x 1.2 mm.	1						
4443.02	SCREW-UNION	1						
4609.05	UNION, adjustable ( )					1		
4608.07	SCREW-UNION					1		
4442.01	GASKET, 15 x 21 x 1.2 mm.					1		
4610.01	GASKET, 13 x 21 x 1.2 mm.					1		
2098.13	VALVE	1						
4654.01	GASKET, copper 22.5 x 26.2 x 1.2 mm.	1						
4615.11	VALVE, complete, with gasket					1		
4437.05	GASKET, 9.7 x 15.6 x 2 mm.	1						
	SPRING, assy. :							
4618.13					1	1		1
4618.15						1		
4619.09	CUP, main (Except 404/8)					1		1
4619.10	CUP, main					1		
	PISTON, assy. :							
4621.15						1		
4621.16					1	1		
4621.17								1
4622.09	CUP, secondary (See 20 IJ)				1	1		1
4622.11	CUP, secondary					1		
4624.07	WASHER, 14 x 24 x 2.5 mm. (See 20 IJ)				1	1		
4624.08	DISC, safety (Except 404/8)					1		1
4624.09	WASHER					1		
4625.03	RING, lock					1		
4625.06	RING, lock (See 20 IJ)	1	1	1				1
4629.03	BOOT					1		
4630.05	CLAMP					1		
	KIT, repair :							
4633.22	standard				1			
4633.24	standard				1			
4633.28	standard					1		
4633.29	reduced					1		
4633.30	regular (tandem type master-cylinder)	1						
4633.31	reduced				1			
4633.35	standard							1

Printed in France

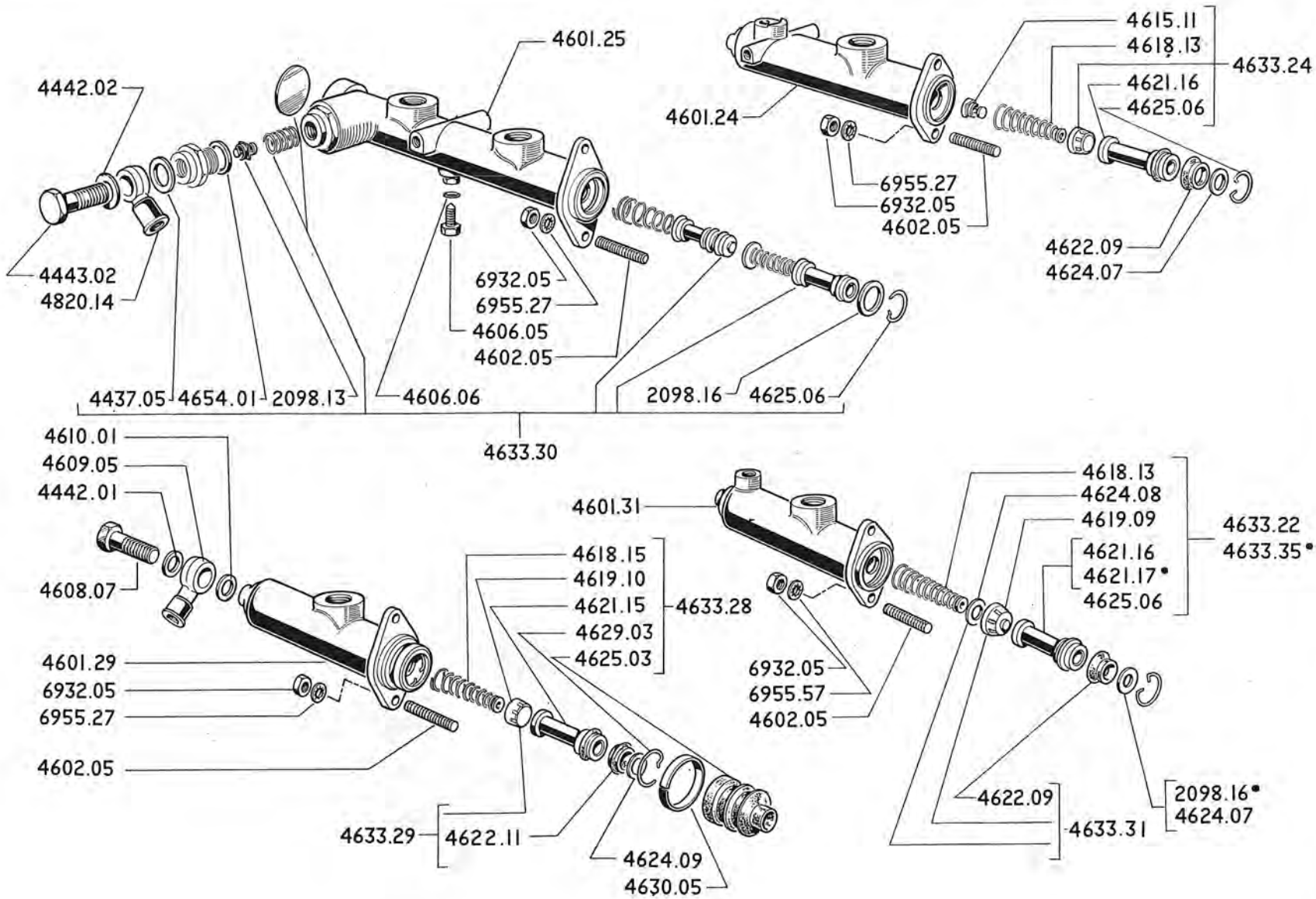
4442.02
4601.25
4443.02
4820.14
4437.05
4654.01
2098.13
4606.06
6932.05
6955.27
4606.05
4602.05
2098.16
4625.06
4633.30
4601.24
4615.11
4618.13
4633.24
4621.16
4625.06
6955.27
6932.05
4602.05
4622.09
4624.07
4610.01
4609.05
4442.01
4608.07
4601.29
6932.05
6955.27
4602.05
4618.15
4619.10
4621.15
4629.03
4625.03
4633.28
4633.29
4622.11
4624.09
4630.05
4601.31
4618.13
4624.08
4619.09
4621.16
4621.17•
4625.06
4633.22
4633.35•
6932.05
6955.57
4602.05
4622.09
4633.31
2098.16•
4624.07

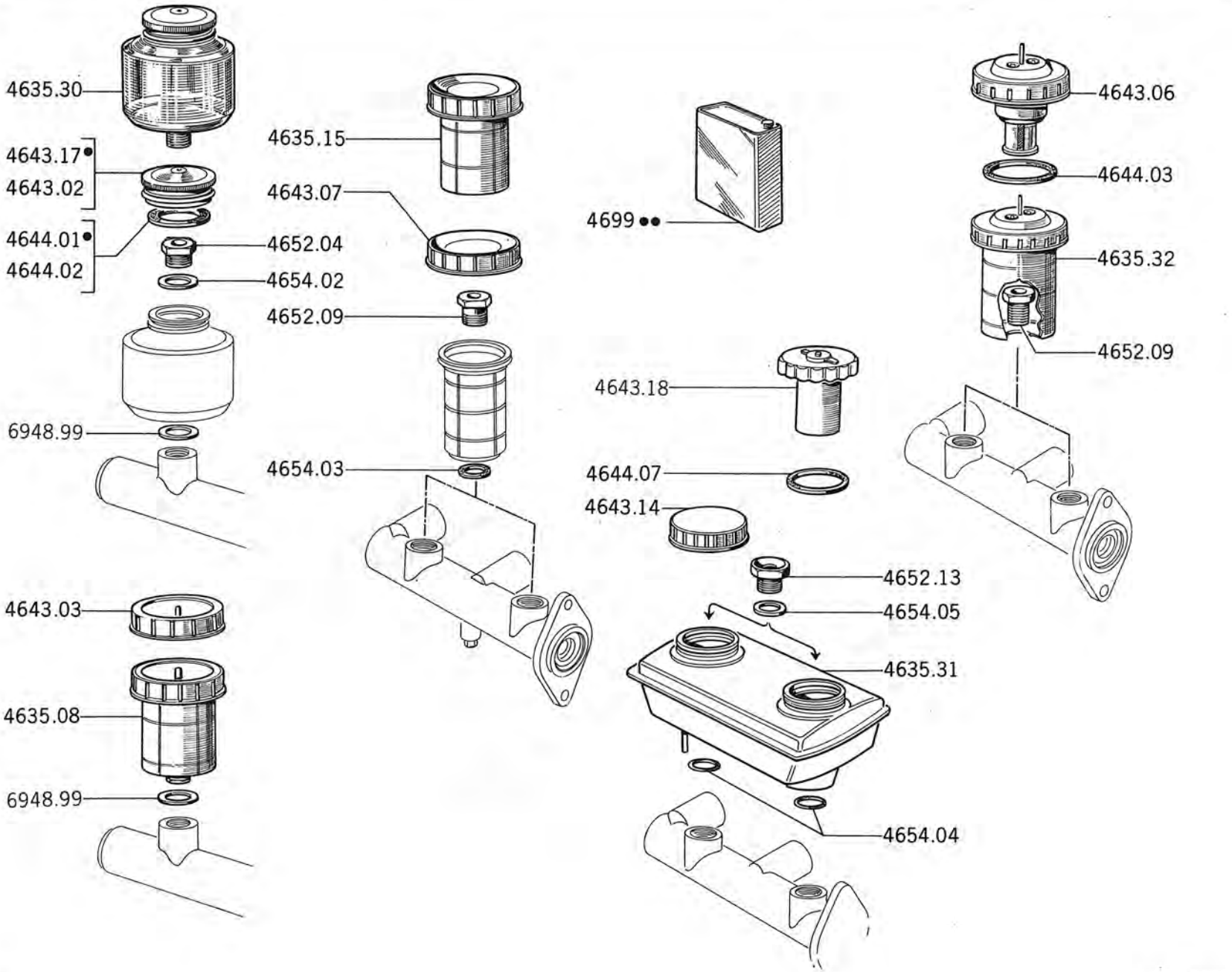

Printed in France

		A	B	C
Single Circuit	A –			
Dual Circuit	B – (USA) : 404 U6A, 404 U6S			
	C – (Sweden, Norway, (CH) : 404 D; U10, U10D → 1971 Motor-Show)			
	RESERVOIR, brake fluid, with cap :			
4635.08	Stop (Except Diesel)	1		
4635.15	Lockheed		2	
4635.30	Lockheed	1		
4635.32	Lockheed with level indicator cap "Nivocode" (Except 404 D)			2
4635.31	BODY, only, brake fluid reservoir (plastic) 404 D)			1
	CAP, brake fluid reservoir :			
4643.02	without rubber gasket (Lockheed)	1		
4643.03	Stop	1		
4643.07	Lockheed		2	
4643.17	with rubber gasket (Lockheed)	1		
4643.06	with fluid level indicator "Nivocode" (Lockheed) (Except 404D)			2
4643.14	with fluid level indicator "Nicocode" – Brake fluid reservoir plastic body (404 D)			1
4643.18	with fluid level indicator "Nicocode" – Brake fluid reservoir plastic body (404 D)			1
	GASKET, brake fluid reservoir cap :			
4644.01	Lockheed	1		
4644.02	Stop	1		
4644.03	"Nivocode" level indicator cap (Lockheed) (Except 404 D)			2
4644.07	"Nivocode" level indicator cap (404 D)			1
	HOLLOW SCREW; connecting and fixing :			
4652.04		1		
4652.09	(Except 404 D)		2	2
4652.13	(404 D)			2
4654.05	WASHER, on master-cylinder (404D)			2
	GASKET :			
4654.02	19.3 x 24 x 1.2 mm.	1		
4654.03	17.5 x 23 x 3 mm.		2	
4654 04	18 x 23 x 2.5 mm (404 D)			2
	BRAKE FLUID (Lockheed HD 31 or Stop HD 65) :			
4699.04	0.50 l. can.	–	–	–
4699.05	1 l. can.			
4699.06	2 l. can.			
	→ 404:5.040.511, 4.529.765, 4.567.161; D:4.604.645; C:4.497.595, 4.593.522; L:4.850.672; LD:4.978.948; U6:4.736.909 U6D:4.908.070; U6A:1.923.224; all 404 DA			
	BRAKE FLUID (Lockheed 55 or Nafic FN 3):			
4699.11	0.50 l. can.	–	–	–
4699.12	1 l. can.			
4699.14	5 l. can.			
4699.16	60 l. drum.			
	→ 404XC5:5.040.511, XC6:5.075.000, 4.529.765, 4.567.161; A8:1.910 000; D:4.604.645; C:4.497.595, 4.593.522; LXC5:4.850.672 XC6:4.940.000; LD:4.978.948; U6:4.736.909; U6D:4.908.070; U6A:1.923.224, 7.100 100 and all LXC7, U6S			

Single Circuit

A – All 404 (Except USA and 404/8), 404 C → 1968 Motor-Show; 404 USA → 1967 Motor-Show; all 404LXC5, LXC6, LXC7, U6A ..... A

B – 404/8 → 1968 Motor-Show ..... B

C – All 404 and → 1968 Motor-Show C

4635.33	RESERVOIR, brake fluid, complete with «Nivocode» level indicator cap and hollow screw	1		
	BODY, only, brake fluid reservoir (plastic) :			
4635.16	–	1		1
4635.23	– Sweden → 1971 Motor-Show			1
4636.05	BRACKET (→ 404 Coupler : 4.535.239)	1		
4636.06	BRACKET ( )			1
	CAP, with fluid level indicator «Nivocode» :			
4643.05	–	1		
4643.10	–		1	1
4643.13	– Sweden → 1971 Motor-Show			1
	GASKET, brake fluid reservoir cap :			
4644.01	–	1		
4644.05	– → 404/8 6.905.609		1	
4644.06	– → 404/8 6.905.609; all vehicles column «C»		1	1
4646.04	HOLLOW-SCREW → 404 Coupler : 4.535.239	1		
4647.02	NUT, Ø 19 mm	2		
	HOLLOW-SCREW :			
4652.04	– → 404 Coupler : 4.535.239; all vehicles column «A»	1		
4652.09	–		1	1
4652.10	SCREW-UNION, on master-cylinder (→ 404 Coupler : 4.535.239)	1		
4652.12	SCREW-UNION, on master-cylinder ( )			1
4654.02	GASKET, 19.3 x 24 x 1.2 mm. : – reservoir hollow-screw	1		
	– on master-cylinder (→ 404 Coupler 4.535.239)	1		
4654.03	GASKET, rubber, 17.5 x 23 x 3 mm.		1	1
4649.19	PIPE, feed, 3.34 x 4.76 mm. ( ) → 404 Coupler 4.535.239	1		
4801.14	PIPE, feed, 3.34 x 4.76 x 245 mm. ( ) → 404 Coupler 4.535.239	1		
4824.08	SCREW-UNION, 3/8" → 404 Coupler 4.535.239	2		
	BRAKE FLUID :			
4699.09	– 2 l. can (Lockheed HD 43 *)	–	–	–
4699.11	– 0.50 l.	–	–	–
4699.12	– 1 l. can .. Lockheed 55 or Nafic FN3	–	–	–
4699.14	– 5 l. can ...	–	–	–
4699.16	– 60 l. drum .	–	–	–

Printed in France

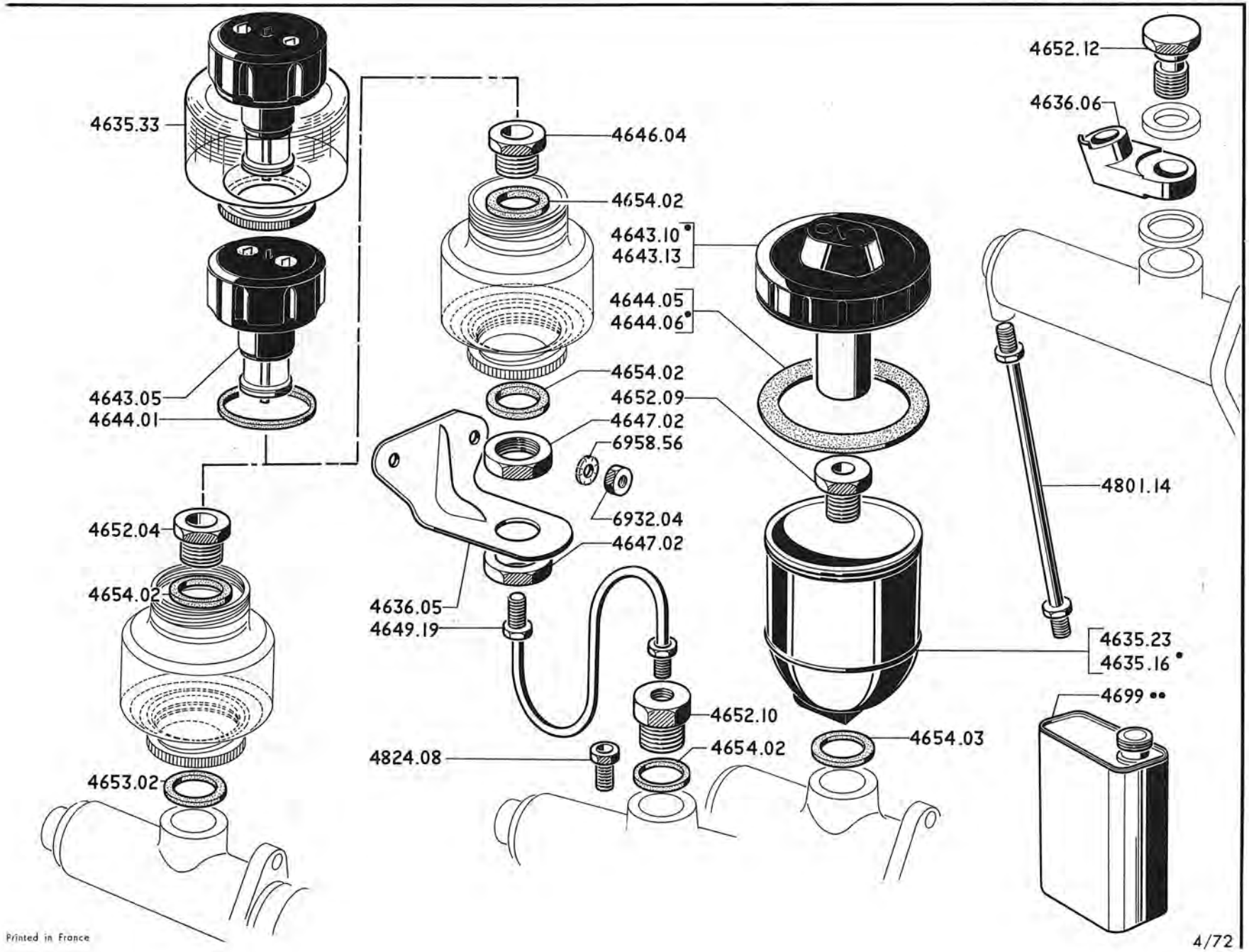

Printed in France

4/72

46M - 404

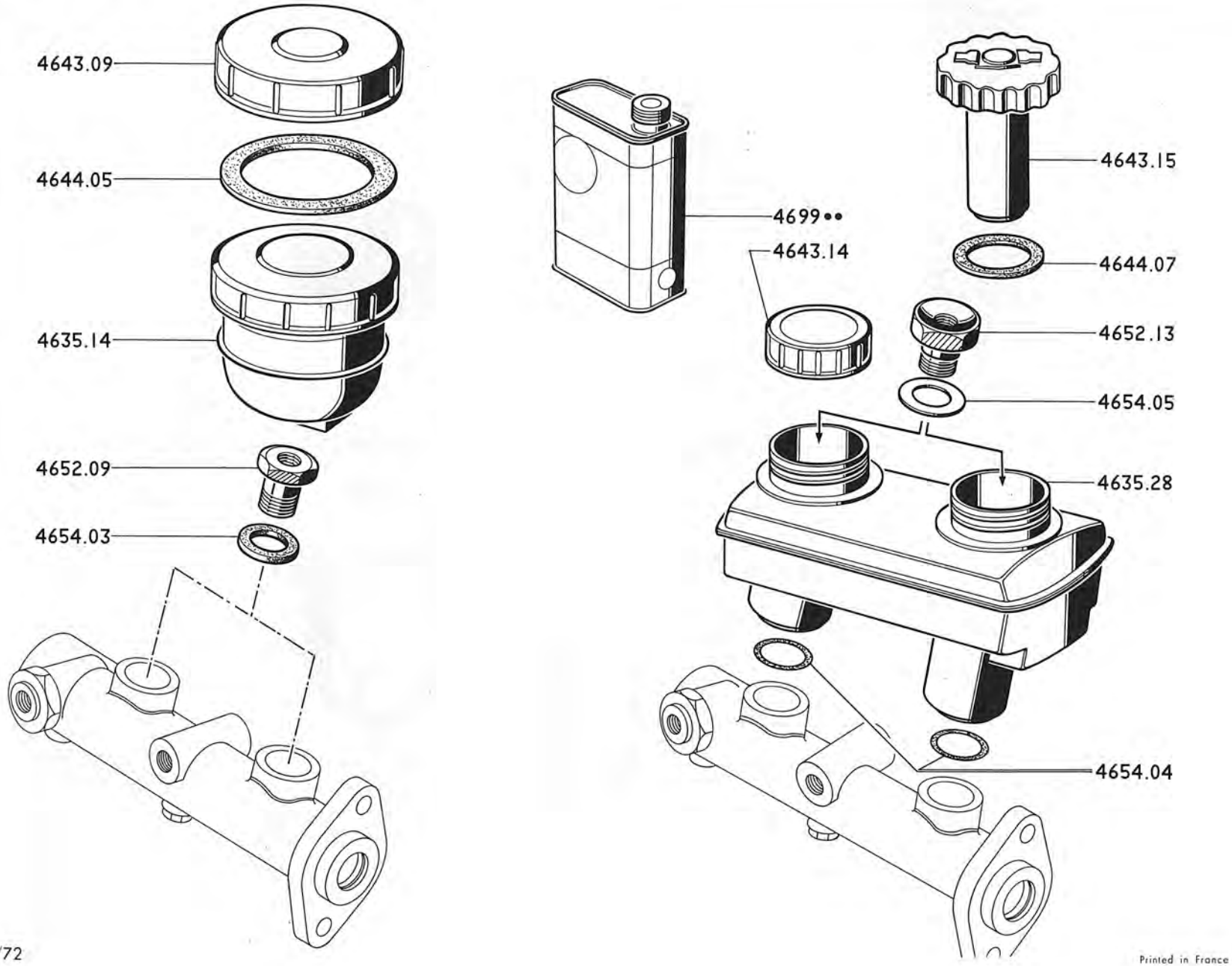

Printed in France

Dual Circuit
A – 404 (USA) ⟶ 1967 Motor-Show ..... A
B – 404 XC7, Auto-Trans: Sweden, Norway, (CH) ⟶ 1971 Motor-Show ..... B

4635.14	RESERVOIR, brake fluid, complete	2
4635.28	BODY, only (plastic)	1
4643.09	CAP ASSY.	2
4643.14	CAP, only	1
4643.15	CAP, with fluid level indicator «Nivocode» (Except Sweden)	1
4643.18	CAP, with fluid level indicator «Nivocode» (Sweden)	1
	GASKET :	
4644.05	–	2
4644.07	– «Nivocode» cap	1
	HOLLOW-SCREW :	
4652.09	–	2
4652.13	–	2
	GASKET, rubber :	
4654.03	– 17.5 x 23 x 3 mm.	2
4654.04	– 18 x 23 x 2.5 mm.	2
4654.05	WASHER, 19.2 x 27 x 0.5 mm.	2
	BRAKE FLUID :	
4699.09	– 2 l. can (Lockheed HD 43 ★)	– –
4699.11	– 0.50 l. can	– –
4699.12	– 1 l. can ... Lockheed 55 or Nafic FN3	– –
4699.14	– 5 l. can ..	– –
4699.16	– 60 l. drum .	– –

A – →| 404XC5:5.073.666;XC6:5.570.281, 8.264.221; (USA) :8.352.279, 8.355.199;D:4.657.243;LXC5:TW:7.001.148; LTH:7.120.241;LXC6:TW:4.943.247;LTH:6.862.371;LD:4.494.149;U6:4.788.224;U6D:4.926.022; U6A:1.937.830, 7.101.963;U8:7.021.760;U8D:7.050.542;U10:7.132.806;U10D:7.085.323 and all Coupler Injection, A8, 404/8, DA, 404C →| End of production ..... A

B – |→ 404 Auto-Trans.:8.264.221; (USA) :8.352.279, 8.355.199;D:4.657.243;LD:4.494.149;U6:4.788.224; U6D:4.926.022;U6A:1.937.830, 7.101.963;U8:7.021.760;U8D:7.050.542;U10:7.132.806;U10D:7.085.323 →| 8.268.571, 8.352.345, 8.355.340, 7.170.929, 7.220.527, 7.241.932, 4.931.667, 1.938.216, 7.102.015, 7.271.130, 7.057.126, 7.148.918, 7.090.019 and all 404U6S

|→ 404XC5:5.073.666; XC6:5.570.281 →| 404XC7:5.621.817

|→ 404LXC5:TW:7.001.148; LTH:7.120.241;LXC6:TW:4.943.247; LTH:6.862.371 →| LXC7:TW:4.944.394; LTH:6.884.960 ..... B

4704.08	HANDLE, with trigger, parking brake operation	1	1
4712.03	SPACER, 9 x 11.8 x 26 mm.	1	1
4716.05	TRIGGER	1	1
4717.03	PIN, 6 x 20 mm., parking brake handle trigger and sector	2	2
9153.02	WASHER, resilient, 8.2 x 19 x 0.3 mm.	1	1
4733.06	SPRING, leaf, parking brake control handle trigger	1	1
4734.03	(See 63 QR, 82 CD, 82 KL, 82 MN, 87 CD)		
4738.10	SECTOR, notched	1	1
4739.02	PIN, 8 x 16.5 mm., equalizer clevis	2	
	CABLE, with sheath, parking brake control :		
4745.15	(Use with spring 2148.11 →| 404:5.039.931, 4.529.879, 4.567.084; A8:1.910.100; DA:3.060.687; D:4.604.611; C:4.498.000, 4.594.000; L:4.850.621; LD:4.978.935; U6:4.736.859; U6D:4.908.052; U6A:1.923.197)	1	
4745.26			1
4745.27	(For column « A » fit yoke 4746.05)	1	1
4746.01	CLEVIS, cable attachment to operating handle	1	
4746.05	YOKE, cable attachment to relay lever		1
4747.01	CLEVIS, cable attachment to relay lever and rear cables adjustment	3	
4748.02	PIN, 8 x 28.5 mm., parking brake cable clevis to handle	1	1
4748.03	PIN, 8 x 18.5 mm., relay lever and rear cables adjustment clevis	–	–
4752.01	SLEEVE, cable protection	1	1
4753.02	COLLAR, clamping	1	1
4753.03	COLLET, clamping	1	1
4754.02	SCREW, 6 x 17 mm., cable attachment to pedals-support	1	1
4754.03	CLIP	1	1
	LEVER, relay, parking brake rear cables equalizer :		
4764.15	→| 404LXC5:TW:4.898.400; TH:4.880.800; LD:4.983.800; U6:4.761.300; U6D:4.914.200; U6A:1.927.900 and all 404Sedan, 404C (Except 404/8)	1	1
4764.19	|→ 404LXC5:TW:4.898.400; TH:4.880.800; LD:4.983.800; U6:4.761.300; U6D:4.914.200; U6A:1.927.900, 7.100.000 and all 404/8, U8, U8D, U10, U10D) (Except 404 (D) and Sweden)	1	1
4764.22	404 (D) and Sweden	1	1
4766.05	NUT, Ø 10 mm., relay lever fixing	1	1
4768.04	SPRING, return	1	1
4771.03	CLEVIS, double	1	
4771.05	ROD, rear cables equalizer adjustment		1
4771.06	SPACER		1
4772.03	EQUALIZER	1	
4772.06	EQUALIZER		1

Printed in France

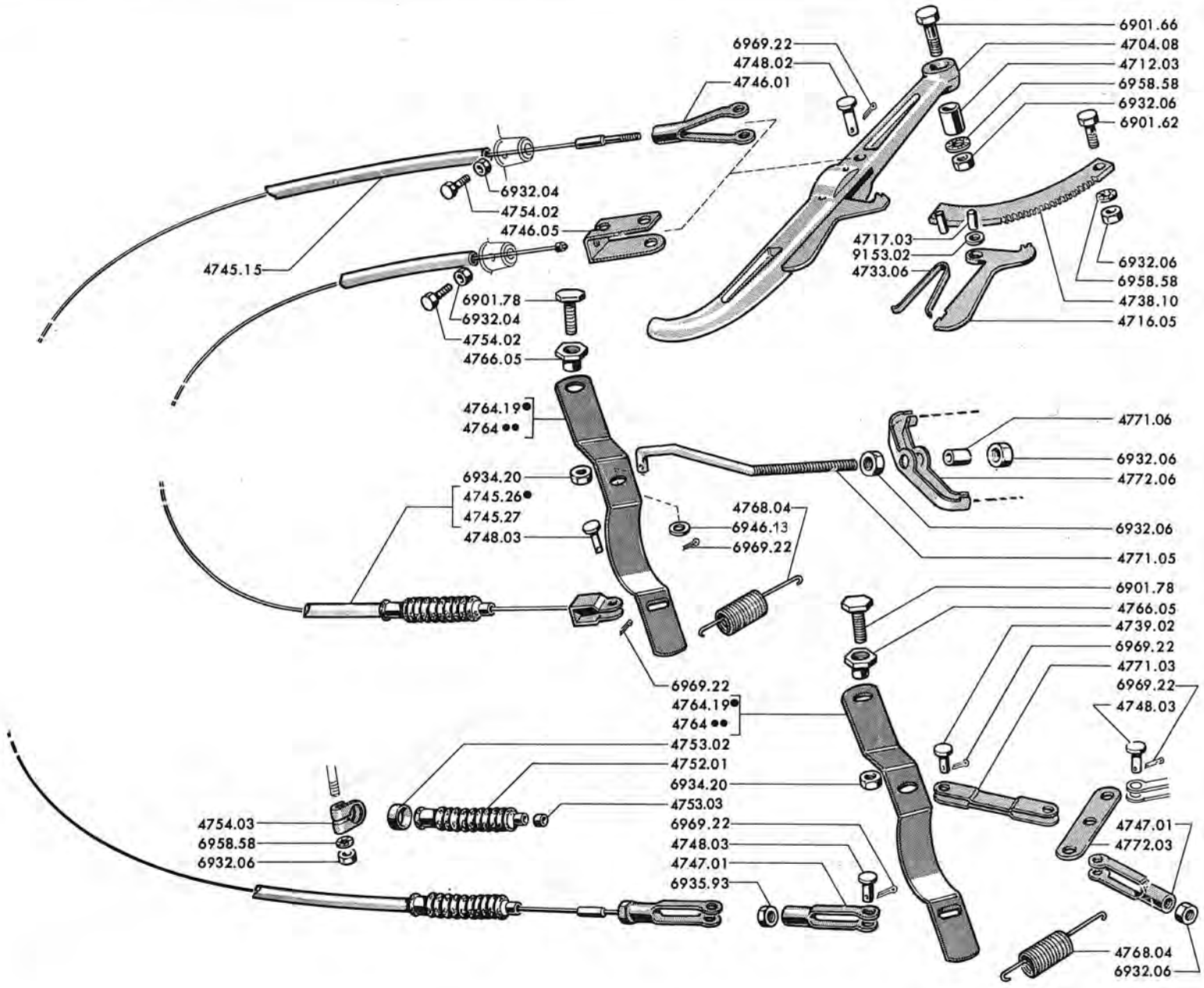
6901.66
6969.22
4704.08
4748.02
4712.03
4746.01
6958.58
6932.06
6901.62
6932.04
4754.02
4746.05
4717.03
9153.02
4733.06
6932.06
6958.58
4738.10
4716.05
4745.15
6901.78
6932.04
4754.02
4766.05
4764.19●
4764●●
4771.06
6932.06
4772.06
6934.20
4745.26●
4745.27
4748.03
4768.04
6946.13
6969.22
6932.06
4771.05
6901.78
4766.05
4739.02
6969.22
4771.03
6969.22
4748.03
6969.22
4764.19●
4764●●
4753.02
4752.01
6934.20
4753.03
4754.03
6958.58
6932.06
6969.22
4748.03
4747.01
6935.93
4747.01
4772.03
4768.04
6932.06

47 C - 404

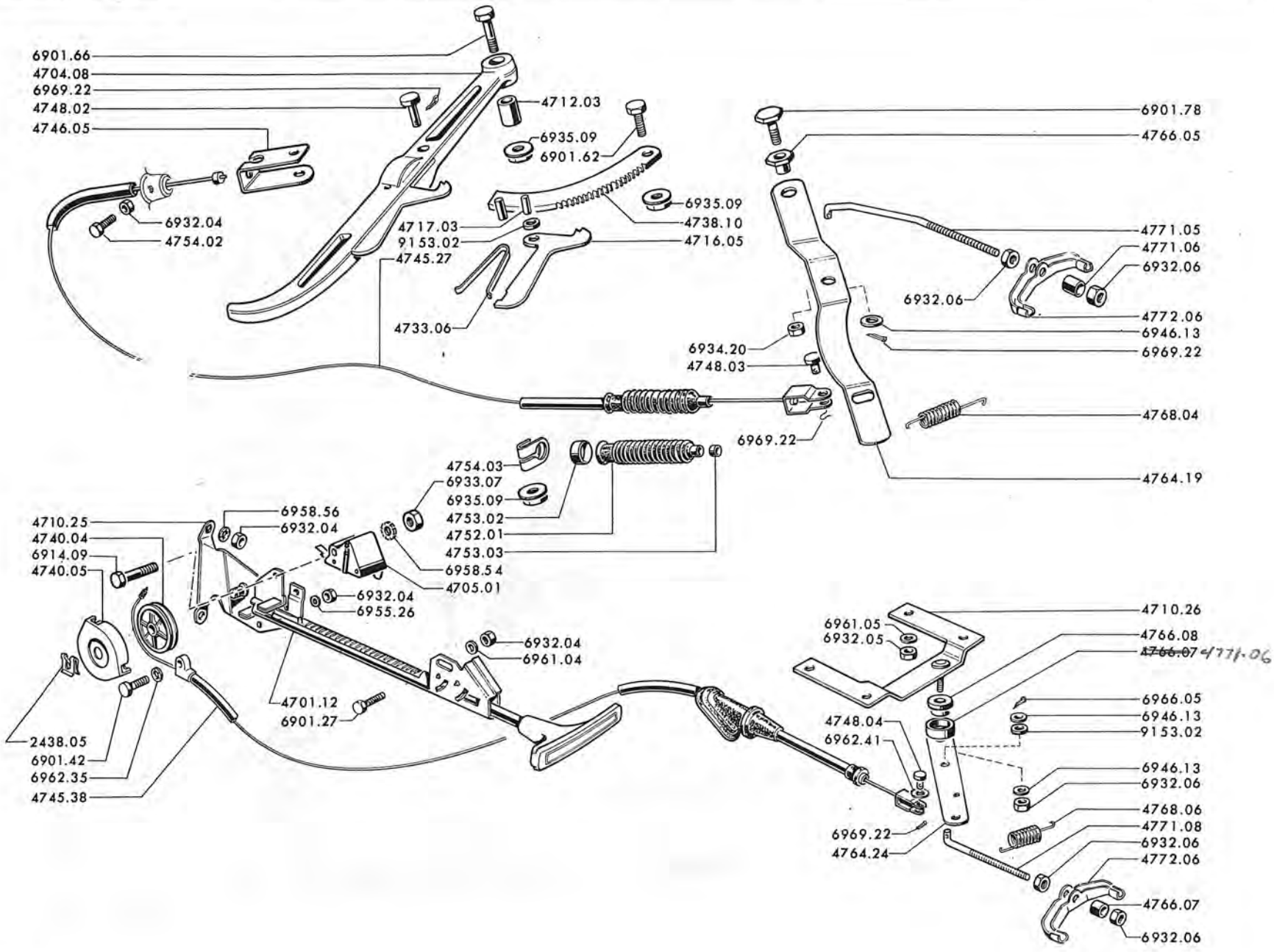

Printed in France

	XC7	Auto-Trans.	D	LXC7:TW	LXC7:TH	LD
→	5.621.817	8.268.571	7.170.929	4.944.394	6.884.960	7.220.527
	U6B	U6D	U8A	U8D	U10	U10D
→	7.241.932	4.931.667	7.271.130	7.057.126	7.148.918	7.090.019

A – All ..... A
B – All ..... B

4701.12	HANDLE, parking brake operation	1	
4704.08	HANDLE, with trigger, parking brake operation		1
4705.01	CONTACTOR, parking brake application tell-tale lamp (Sweden)	1	
4710.25	SUPPORT	1	
4710.26	SUPPORT	1	
4712.03	SPACER, 9 x 11.8 x 26 mm.		1
4716.05	TRIGGER		1
4717.03	PIN, 6 x 20 mm., parking brake handle and trigger		2
4733.06	SPRING, leaf, parking brake handle trigger		1
4738.10	SECTOR, notched		1
4740.04	PULLEY, plastic.	1	
4740.05	BOX, plastic	1	
4745.27	CABLE, with sheath, parking brake control		1
4745.38	CABLE, with sheath, parking brake control	1	
4746.05	YOKE, cable attachment to relay lever		1
4748.02	PIN, 8 x 28.5 mm., parking brake cable clevis to handle		1
4748.03	PIN, 8 x 18.5 mm., relay lever and rear cables adjustment clevis		1
4748.04	PIN, clevis 6 x 15.5 mm.	1	
4752.01	SLEEVE, cable protection		1
4753.02	COLLAR, clamping		1
4753.03	COLLET, clamping		1
4754.02	SCREW, 6 x 17 mm., cable attachment to pedals-support		1
4754.03	CLIP		1
	LEVER, relay, parking brake rear cables equalizer :		
4764.19	Except 404 (D) and Sweden		1
4764.22	404 (D) and Sweden		1
4764.24		1	
4766.05	NUT, Ø 10 mm., relay lever fixing		1
4766.07	SPACER	1	
4766.08	BUSHING	1	
	SPRING, return :		
4768.04			1
4768.06		1	
4771.05	ROD, rear cables equalizer adjustment		1
4771.06	SPACER		1
4771.08	ROD, rear cables equalizer adjustment	1	
4772.06	EQUALIZER	1	1
2438.05	CLIP	1	
9153.02	WASHER, resilient, 8.2 x 19 x 0.3 mm.	1	1

A – →| 404:5.057.592, 4.530.000, 4.570.000; A8:1.910.100; D:4.609.342; C:4.498.000; 4.594.000; all 404DA

B – →| 404L:4.854.909; LD:4.981.019; U6:4.745.998; U6D:4.909.572; U6A:1.925.000

		A	B
4801.12	PIPE, feed, 4.85 x 6.35 x 245 mm., front brake, assy ◄►	1	1
4802.14	PIPE, feed, 4.85 x 6.35 x 775 mm., front brake, assy. ◄►	1	1
4804.05	BRACKET	2	2
4805.01	SCREW, 7 x 13 mm.	2	2
4806.07	HOSE, feed, length : 354 mm., front brake	2	2
4808.02	NUT, 5/8 ", front and/or rear brake feed hose (See 45 KL, 45 MN, 45 OP)	4	4
4809.02	WASHER, thrust, 16.3 x 24 x 2 mm., rear brakes feed hose	1	1
4810.04	PIPE, general feed, 4.85 x 6.35 x 340 mm., brakes, assy. (Gas-(petrol) Engine) (◉)	1	1
4810.08	PIPE, general feed, 4.85 x 6.35 x 407 mm., brakes, assy. (Diesel Engine) (◉)	1	1
1565.06	STAPLE (◉)	2	2
4811.02	UNION, four-way, front brakes feed pipes	1	1
4812.01	SCREW, hex-head, 7 x 80 mm., attaching, brakes feed pipes four-way union (Injection Engine)	1	
4813.12	PIPE, feed, main, 4.85 x 6.35 x 1860 mm., rear brakes, assy.	1	1
4814.05	STAPLE, rear brakes main feed pipe and fuel tank pipe, under front floor (all 404, 404A8, DA, D, C, L, U6, U6A (Except Injection)	3	3
4814.08	PLATE, rear brakes feed hose attachment	1	1
1565.16	STAPLE, rear brakes main feed pipe and fuel pipes (404LD, U6D, 404, 404 C Injection)	3	3
4816.03	HOSE, feed, length : 478 mm., rear brakes	1	1
4818.15	PIPE, feed, intermediate, 4.85 x 6.35 x 375 mm., rear brakes	1	
4818.16	PIPE, feed, intermediate, 4.85 x 6.35 x 567 mm., rear brakes		1
1572.03	RUBBER, 6 x 14 x 20 mm., protecting (→| 404L:4.831.728; LD:4.976.244; U6:4.712.752; U6D:4.902.627)		1
4820.04	UNION, three-way, rear brakes feed pipes	1	1
	PIPE, feed, 4.85 x 6.35 mm. :		
4822.14	665 mm., rear brake, assy. ◄►	1	
4822.16	length : 1.085 mm., brakes general feed, assy. (404, 404L, LD, U6, U6D) (◉)	1	1
4822.18	length : 780 mm., rear brake, assy. ◄►		1
4823.10	length : 690 mm., rear brake, assy. ◄►	1	
4823.13	length : 805 mm., rear brake, assy. ◄►		1
4824.06	SCREW-UNION, 7/16 " (See 44 AB)	14	14
4828.01	RUBBER, split, protecting, 6 x 8 x 20 mm. (See 20 IJ) :		
	– rear brake feed pipe clasp	2	2
	– rear brake intermediate feed pipe (►| 404L:4.831.728; LD:4.976.244; U6:4.712.752; U6D:4.902.627; all 404U6A)		1
4828.02	TUBE, split, plastic, 9 x 12 x 40 mm., protecting	2	4
4834.33	CABLE, actuating, with casing, assy. (length : 1.818 mm.), rear brake	2	
4834.34	CABLE, actuating, with casing, assy. (length : 1.978 mm.), rear brake		2

Printed in France

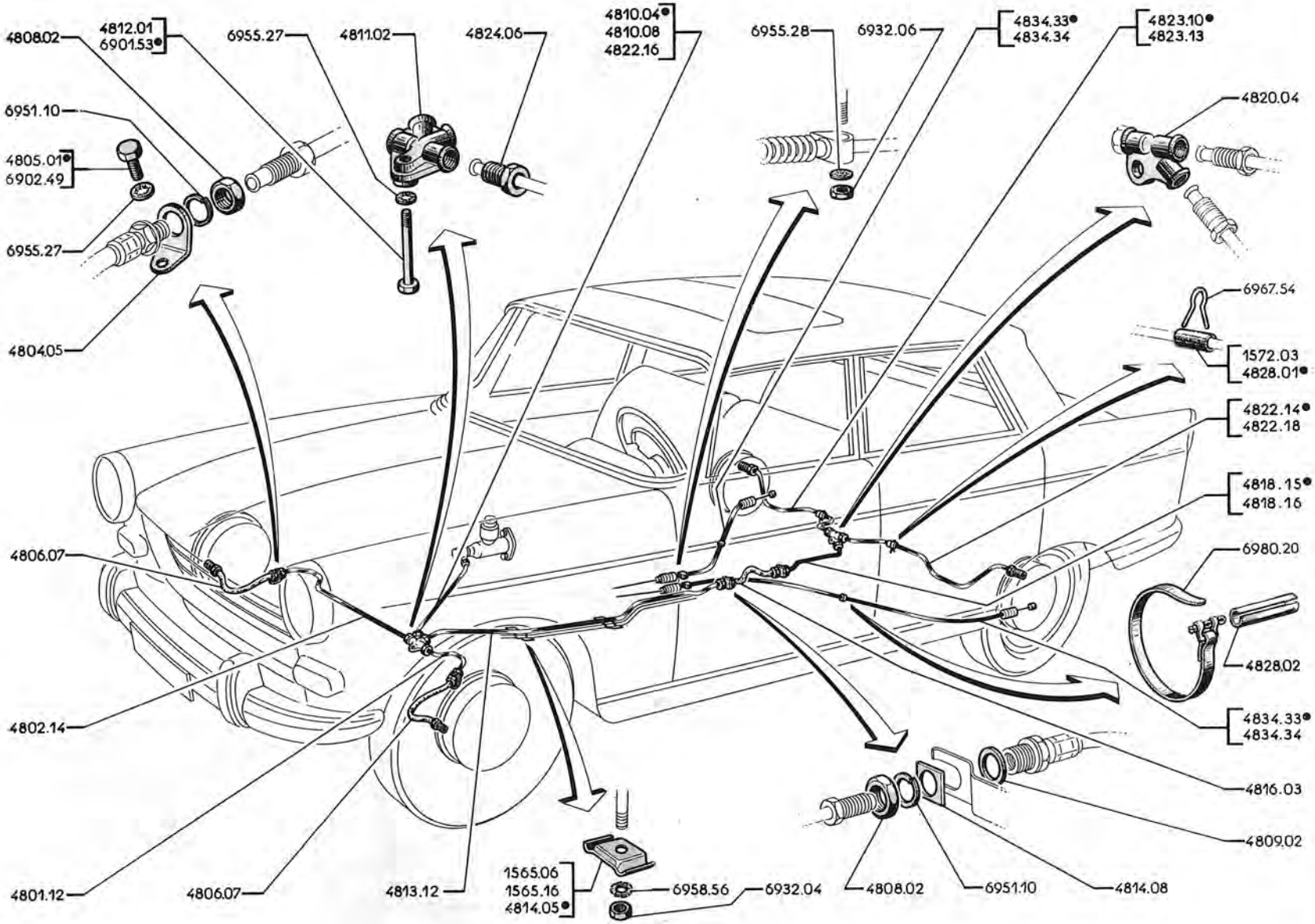
4808.02
4812.01
6901.53●
6955.27
4811.02
4824.06
4810.04●
4810.08
4822.16
6955.28
6932.06
4834.33●
4834.34
4823.10●
4823.13
4820.04
6951.10
4805.01●
6902.49
6955.27
4804.05
6967.54
1572.03
4828.01●
4822.14●
4822.18
4818.15●
4818.16
4806.07
6980.20
4828.02
4802.14
4834.33●
4834.34
4816.03
4809.02
4801.12
4806.07
4813.12
1565.06
1565.16
4814.05●
6958.56
6932.04
4808.02
6951.10
4814.08

48C - 404

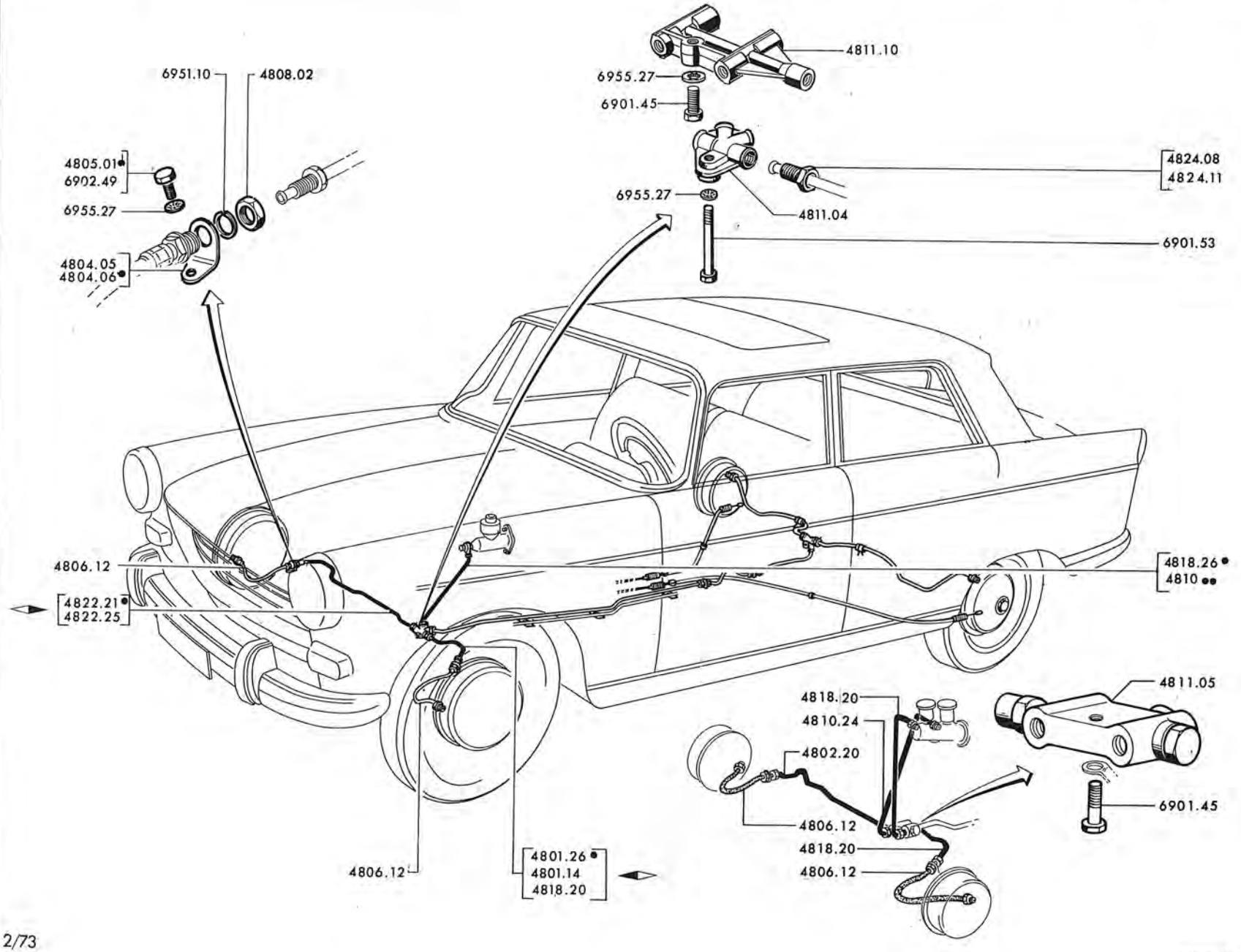

Printed in France

		A	B
	A – All types, except 404U6A (USA) (CH), Norway, Sweden →I 1971 Motor-Show	A	
	B – All 404U6A (USA) (CH), Norway, Sweden I→ 1971 Motor-Show		B
	PIPE, 3.34 x 4.76 mm., brake feed, with screw-unions :		
4801.14	◀▶ →I 1968 Motor-Show (See 46 KL)	1	
4801.26	◀▶ I→ 1968 Motor-Show	1	
4802.20	◀▶ →I 1968 Motor-Show		1
4822.21	◀▶ I→ 1968 Motor-Show		1
4822.25	◀▶	1	1
4804.05	BRACKET →I 1968 Motor-Show	2	2
4818.20	PIPE, 3.34 x 4.76 mm. :		
	– brake feed, ◀▶ →I 1968 Motor-Show		1
	– general feed, rear circuit		1
4804.06	LUG, support I→ 1968 Motor-Show	2	2
4805.01	SCREW, 7 x 13 mm. (Except 404U8, U8D, U10, U10D)	2	2
4806.12	HOSE, flexible, length : 373 mm. (See 45 KL, 45 MN, 45 OP)	2	2
4808.02	NUT, 5/8 "	2	2
	PIPE, 3.34 x 4.76 mm. :		
4810.10	general feed (Diesel) →I 1968 Motor-Show	1	
	◀▶ I→ 1968 Motor-Show		1
4810.11	general feed ◠	1	
4810.24	general feed, front circuit		1
4818.26	general feed ◠ (All Gas-(petrol) and Diesel Engines I→ 1968 Motor-Show)	1	
4811.04	UNION, 4-way	1	
4811.05	UNION, pressure drop indicator		1
4811.10	UNION, 5-way — Except (USA)		1
4824.11	SCREW-UNION 1/2 " — Except (USA)		1
4824.08	SCREW-UNION, 3/8 " (See 45 KL, 45 MN, 45 OP, 46 KL)	–	–

BRAKES (NON ASSISTED) — (PIPES ø 3.34 x 4.76 mm.) : PIPES, HOSES, UNIONS, ACTUATING CABLES (REAR)

		404		404	404	404D	404 L	404 LD	404 U6	404 U6D	
		XC5	XC6	Coupler	(USA)		XC5				
Worm and Wheel Rear Axle	→→	5.057.592	5.075.000	4.530.001	5.057.592	4.609 342					A
	→←	5.072.600	5.095.600	4.535.000	5.085.000						
	→→						4.854.909	4.981.019	4.745.998	4.909.572	
	→←						4.855.000				
	←→						4.895.000				
	←←						4.898.400	4.983.800	4.761.300	4.914.200	B

4808.02	NUT, 5/8"	2	2
4809.02	WASHER, flat, 16.3 x 24 x 2 mm.	1	1
1565.06	STAPLE ( )	2	2
4814.05	STAPLE, main feed pipes and fuel line	3	3
4814.08	PLATE, retaining	1	1
1565.19	STAPLE, brakes and fuel pipes	3	3
4820.09	UNION, 3-way	1	1
4816.07	HOSE, feed, length : 478 mm.	1	1
	PIPE, 3.34 x 4.76 mm., feed, brakes :		
4813.16	main, length : 1860 mm.	1	1
4818.20	intermediate, length : 375 mm.	1	
4822.27	intermediate, length : 575 mm.		1
4822.20	, length : 680 mm.	1	
4822.21	, length : 780 mm.		1
4823.15	, length : 700 mm.	1	
4823.22	, length : 1025 mm.		1
4824.08	SCREW-UNION, 3/8"	8	8
4828.02	TUBE, plastic, split, 9 x 12 x 40 mm., protecting	2	4
4828.03	RUBBER, split, 4.5 x 8 x 20 mm. :		
	– brake pipe clasp on rear axle tube	2	4
	– brake intermediate pipe		1
	CABLE, with casing :		
4834.33	length : 1818 mm. →← 404D : 4.657.243 and all other types column « A »	2	
4834.34	length : 1978 mm.		2
4834.42	length : 3708 mm. →← 404D : 4.657.243 →← 7.170.929	1	
4834.47	length : 3628 mm. →← 404D : 7.170.929	1	

Printed in France

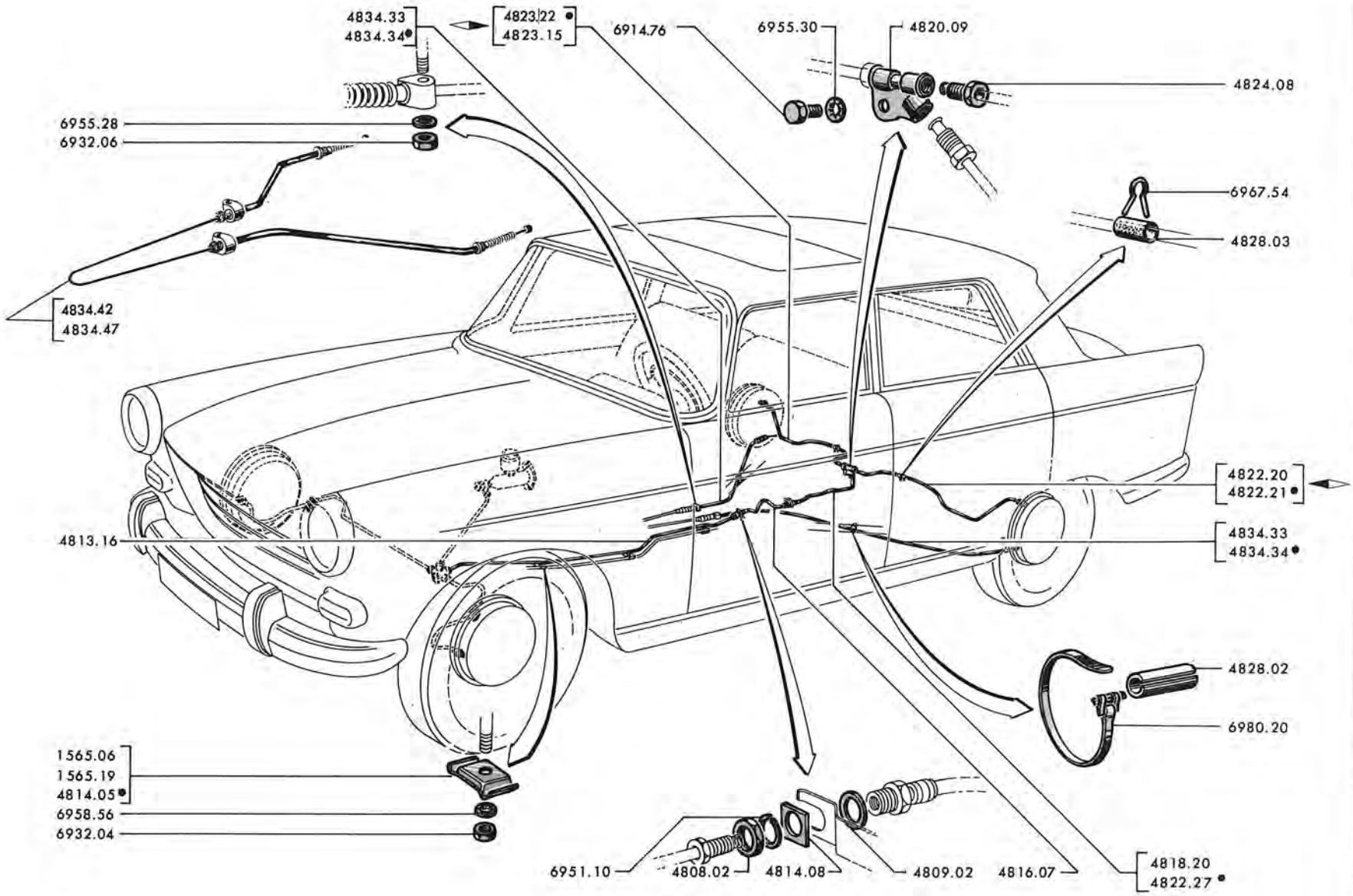
4834.33
4834.34 •
4823.22 •
4823.15
6914.76
6955.30
4820.09
4824.08
6955.28
6932.06
6967.54
4828.03
4834.42
4834.47
4822.20
4822.21 •
4813.16
4834.33
4834.34 •
4828.02
6980.20
1565.06
1565.19
4814.05 •
6958.56
6932.04
6951.10
4808.02
4814.08
4809.02
4816.07
4818.20
4822.27 •

48 G - 404

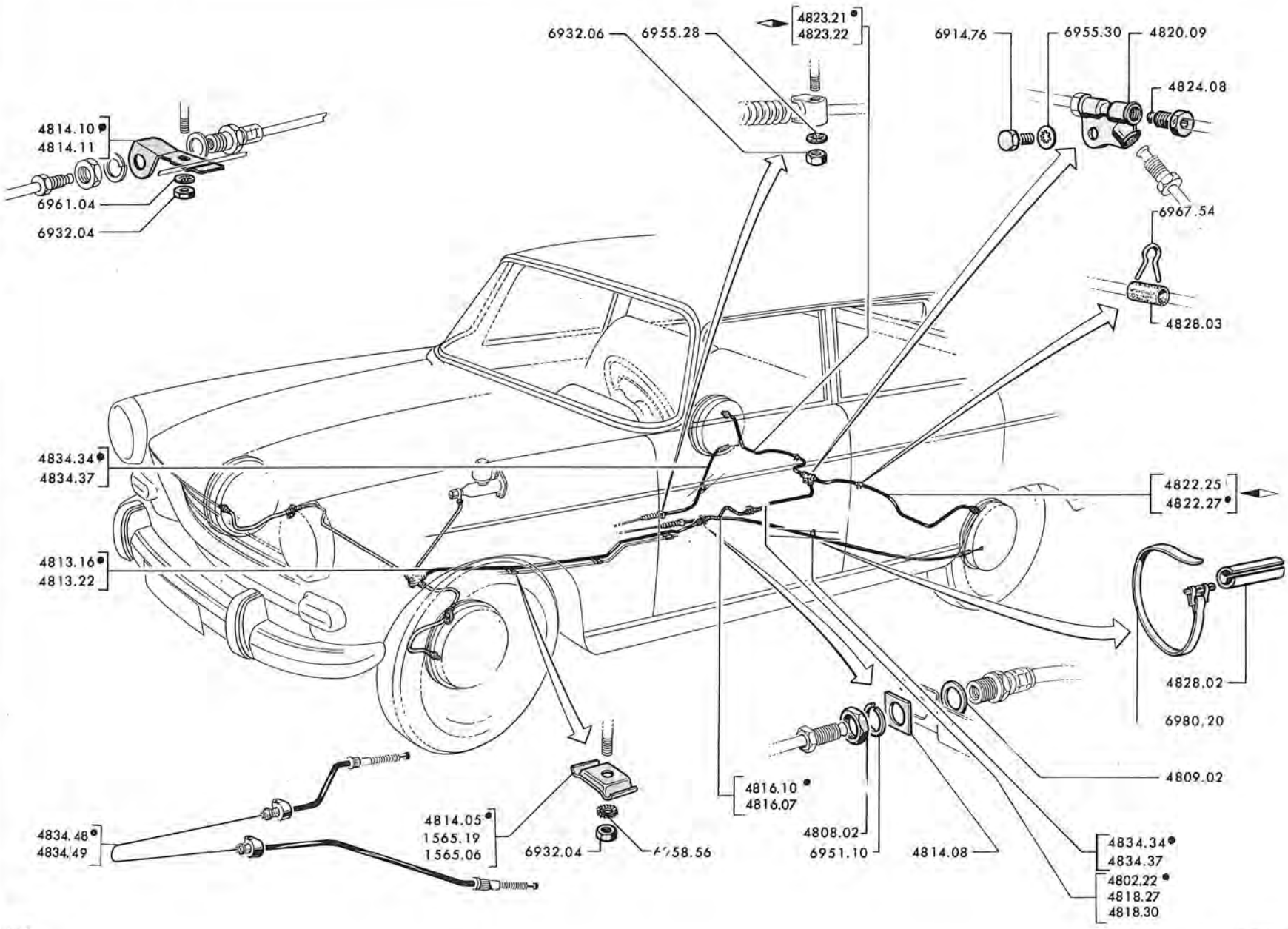

Printed in France

		404 L		404 LD	404 U6	404 U6D	404U7	404U7D	404 U6A (USA)		404U8	404U8D	404 U10	404U10D
		XC5	XC6						Standard Trans.	Auto-Trans.				
HYPOID REAR AXLE	→		4.898.400											
	→		4.900.000											
	↦	7.000.000	4.940.000	4.983.800	4.761.300	4.914.200	7.350.000	7.380.000	1.932.300	7.100.000	7.010.000	7.040.000	7.060.000	7.080.000
	↦	7.001.184	4.943.963						1.938.216	7.102.015				
		XC7							404 U6S					
									Standard Trans.	Auto-Trans.				
	↦	4.944.200							7 160 000	7.162.000				

4808.02	NUT, 5/8"	2
4809.02	WASHER, thrust, flat, 16.3 x 24 x 2 mm.	2
4813.22	PIPE, 3.34 x 4.76 x 1415 mm., brakes general feed (404U8, U8D, U10, U10D)	1
1565.06	STAPLE (◠) (Except 404U8, U8D, U10, U10D)	2
4814.05	STAPLE, main feed pipes and fuel line	3
4814.08	PLATE, retaining	1
4814.10	BRACKET, brakes and fuel pipes, on floor (404U8, U10)	1
4814.11	BRACKET, brakes and fuel pipes, on floor (404U8D, U10D)	1
1565.19	STAPLE, brakes and fuel pipes (Except 404U8, U8D, U10, U10D)	3
4820.09	UNION, 3-way	1
4816.07	HOSE, feed, length : 478 mm. (404U8, U8D, U10, U10D)	1
4816.10	HOSE, feed, length : 399 mm.	1
	PIPE, 3,34 x 4.76 mm., feed, brakes :	
4813.16	main, length : 1860 mm	1
4818.27	length : 610 mm. (→I 404LXC5:TW:4.899.762; XC6:TW:4.941.176; LD:4.986.215; U6:4.771.636; U6D:4.916.999) — Intermediate	1
4802.22	length : 900 mm. (↦ 404LXC5:TW:4.899.762; XC6:TW:4.941.176; LD:4.986.215; U6:4.771.636; U6D:4.916.999; all 404 U6A (USA) (Except 404U8, U8D, U10, U10D) — Intermediate	1
4818.30	length : 1275 mm. (404U8, U8D, U10, U10D) — Intermediate	1
4822.25	length : 815 mm. ◂▸ (→I 404LXC5:TW:4.899.762; XC6:TW:4.941.176; LD:4.986.215; U6:4.771.636; U6D:4.916.999)	1
4822.27	length : 575 mm. ◂▸ (↦ 404LXC5:TW:4.899.762; XC6:TW:4.941.176; LD:4.986.215; U6:4.771.636; U6D:4.916.999; all 404U6A (USA), U8, U8D, U10, U10D)	1
4823.21	length : 1160 mm. ◂▸ (↦ 404LXC5:TW:4.899.762; XC6:TW:4.941.176; LD:4.986.215; U6:4.771.636; U6D:4.916.999; all 404 U6A (USA)) (Except 404U8, U8D, U10, U10D)	1
4823.22	length : 1025 mm. ◂▸ (→I 404LXC5:TW:4.899.762; XC6:TW:4.941.176; LD:4.986.215; U6:4.771.636; U6D:4.916.999 and all 404U8, U8D, U10, U10D)	1
4824.08	SCREW-UNION, 3/8"	8
4828.02	TUBE, split-plastic-protecting, 9 x 12 x 40 mm.	4
4828.03	RUBBER, split, 4.5 x 8 x 20 mm. :	
	– brake pipe clasp on rear axle tube	4
	– brake intermediate pipe	1
	CABLE, with casing, assembly :	
4834.34	length : 1978 mm. (→I 404LXC5:7.001.148; LXC6:4.943.247; LD:4.994.149; U6:4.788.224; U6D:4.926.022 and all (USA))	2
4834.37	length : 2035 mm. (→I 404U8:7.021.760; U8D:7.050.542; U10:7.132.806; U10D:7.085.323)	2
4834.48	length : 3948 mm. (↦ 404LXC5:7.001.148; LXC6:4.943.247; LD:4.994.149; U6:4.788,224; U6D:4.926.022 and all 404LXC7, U7)	1
4834.49	length : 4062 mm. (↦ 404U8:7.021.760; U8D:7.050.542; U10:7.132.806; U10D:7.085.323)	1

A – ↦ 404XC5:5.100.000; XC6:5.311.007, 4.535.000, 8.250.000, 4.570.000; A8:1.910.100; C:4.498.000, 4.594.000; LXC5:4.855.000; LXC6:4.884.000 →| 1968 Motor-Show
(USA) ↦ 404:5.100.000, 8.250.000; U6A:1.925.000, 7.100.000 →| 1967 Motor-Show ..... A

B – 404 (USA), 404U6A (Except (USA)) ↦ 1967 →| 1968 Motor-Show; (CH), Norway, Sweden ↦ 1971 Motor-Show ..... B

C – 404/8 ↦ 1967 →| 1968 Motor-Show C

D – ↦ 1968 Motor-Show (Except U6A (USA)); (CH), Norway, Sweden →| 1971 Motor-Show ..... D

	PIPE, 3.34 x 4.76 mm., brake feed, assy. :					
4801.14	◀▶, length : 245 mm.	1				
4801.26	◀▶, (Except (USA) and U6A)					1
4801.27	◀▶, ((USA) and U6A)					1
4802.20	◀▶, length : 725 mm.		1			
4802.23	◀▶, (Except (USA) and U6A)					1
4802.24	◀▶, ((USA) and U6A)					1
4818.20	◀▶, length : 375 mm.		1			
4822.21	◀▶, length : 780 mm.	1				
4822.25	◀▶, length : 815 mm.			1		
4810.26	◀▶, length : 1200 mm.			1		
4804.05	BRACKET	2	2	2		
4804.06	LUG, support					2
4806.12	HOSE, feed, length : 373 mm.	2	2	2	2	
4808.02	NUT, 5/8 " :					
	– front brake feed hose (Except (USA))	2		2	2	
	– general feed hose (Except 404/8)	1	1		1	
	HOSE or PIPE, brakes general feed :					
4810.14	flexible, length : 300 mm. (404 ↦ →| 1968 Motor-Show) (404/8 ↦ ↦ 1968 Motor-Show and all other types)	1			1	
4810.18	3.34 x 4.76 x 500 mm. (rear circuit)		1		1	
4810.22	3.34 x 4.76 x 515 mm. (front circuit)		1		1	
4813.23	3.34 x 4.76 x 1010 mm.			1		
4818.27	3.34 x 4.76 x 600 mm. (↦)					1
4437.05	GASKET, 9.7 x 15.6 x 2 mm. (Except 404/8)	1	1		1	
4818.10	PIPE, feed, brake, 3.34 x 4.76 x 418 mm., assy. (404 ↦ →| 1968 Motor-Show and all other types)	1			1	
4810.15	BRACKET	1			1	
4811.04	UNION, 4-way (404 →| 1968 Motor-Show and all other types) (Except 404/8)	1			1	
4811.05	UNION, pressure drop indicator ((USA) and U6A)		1		1	
4811.08	UNION, 4-way (404, 404/8 ↦ 1968 Motor-Show)					1
4811.10	UNION, 5-way (Except (USA))		1			
4812.01	SCREW, hex-head, 7 x 80 mm. (Injection →| 404:4.583.871; C:4.596.061)	1				
4814.16	STAPLE, attaching, on front ◀▶ fender inner frame			4		
4820.12	UNION, brass			1		
4824.08	SCREW-UNION, 3/8 " (Except 404/8)	6	6		6	
4824.10	SCREW-UNION, 7/16 "			1		

Printed in France

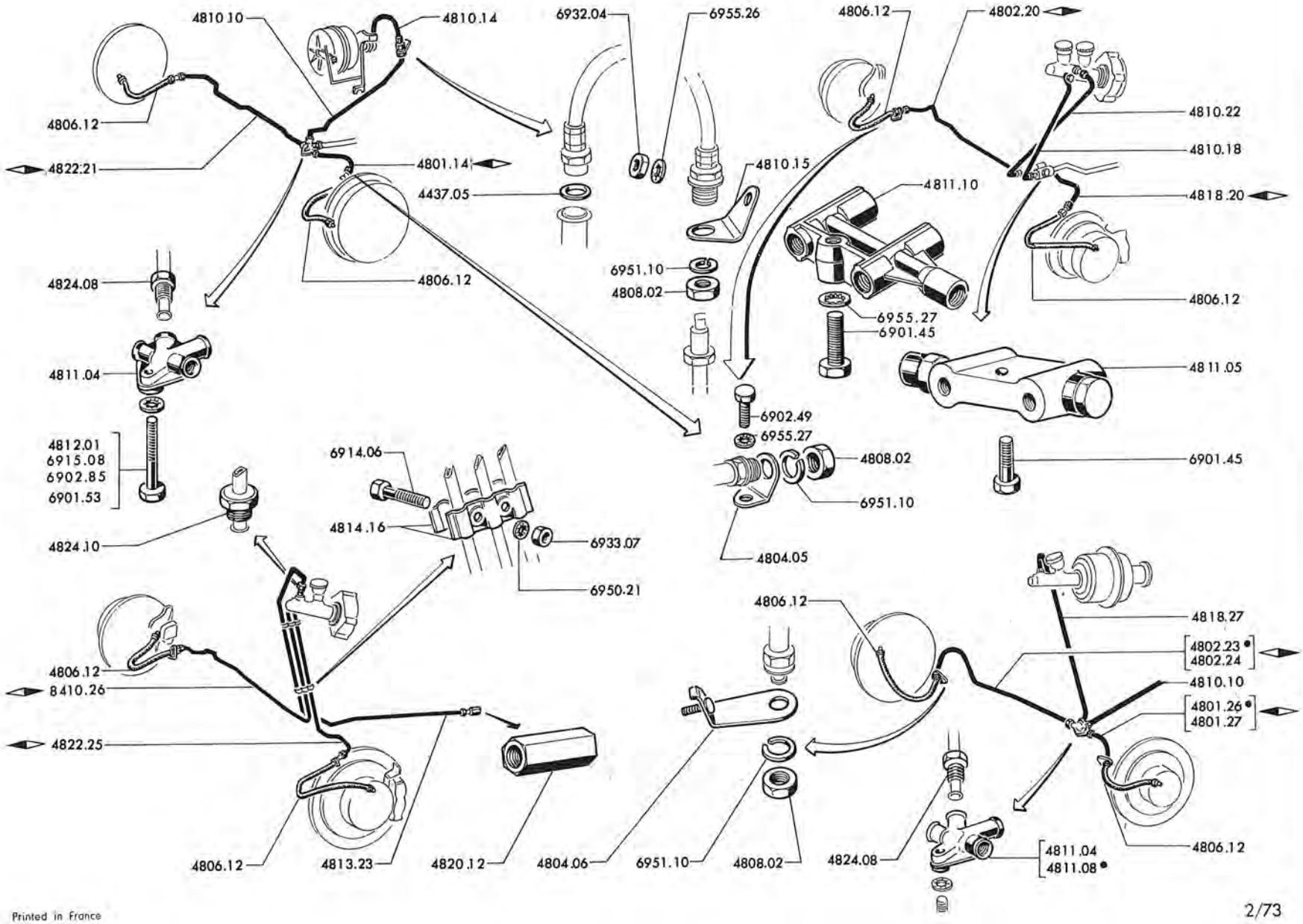
4810.10
4810.14
6932.04
6955.26
4806.12
4802.20
4806.12
4822.21
4801.14
4437.05
4810.15
4810.22
4810.18
4811.10
4818.20
4824.08
4806.12
6951.10
4808.02
6955.27
6901.45
4806.12
4811.04
4811.05
6902.49
6955.27
4812.01
6915.08
6902.85
6901.53
6914.06
4808.02
6901.45
6951.10
4824.10
4814.16
6933.07
4804.05
6950.21
4806.12
4818.27
4806.12
4802.23 •
4802.24
8410.26
4810.10
4822.25
4801.26 •
4801.27
4806.12
4813.23
4820.12
4804.06
6951.10
4808.02
4824.08
4811.04
4811.08 •
4806.12

48 K - 404

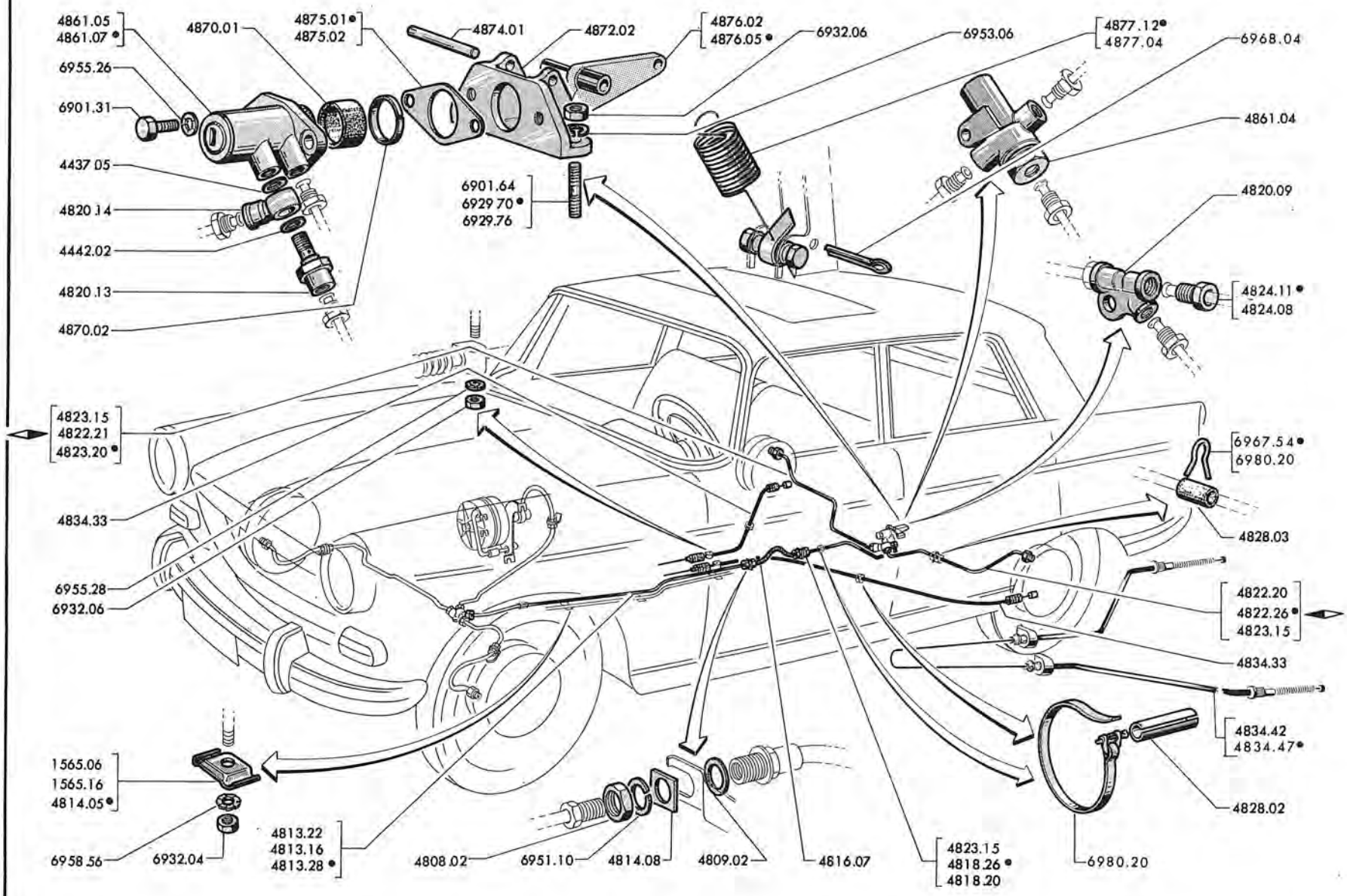

Printed in France

BRAKES (ASSISTED) : PIPES, HOSES, UNIONS, ACTUATING CABLES (REAR) (404, 404C)

Brake Pressure Regulator		XC5	XC6	Coupler	Auto-Trans.	Injection	(USA)	(USA) Auto-Trans.	404A8	404/8	404 C	404 C Injection	
Without	⊢➤	5.100.000		4.535.000	8.250.000	4.570.000	5.100.000	8.250.000	1.910.100		4.498.000	4.594.000	
	➤⊣	5.265.261		4.537.062	8.250.126	8.212.061	5.265.261	8.250.126	1.910.310		4.671.100	6.803.300	A
With	⊢➤	5.265.261	5.311.007	4.537.062	8.250.126	8.212.061	5.265.261	8.250.126	1.910.310	6.900.000			
	➤⊣	5.072.600	5.504.800 all XC7	4.537.191		8.303.300	8.352.345	8.355.340	1.910.525				B

4808.02	NUT, 5/8"	2	2
4809.02	WASHER, thrust, 16.3 x 24 x 2 mm.	1	1
1565.06	STAPLE	1	1
	PIPE, 3.34 x 4.76 mm., brake feed :		
4813.16	length : 1870 mm. ➤⊣ 1968 Motor-Show (Except 404/8)	1	1
4813.22	length : 1415 mm. ➤⊣ 1968 Motor-Show (404/8)		1
4813.28	length : 1844 mm. ⊢➤ 1968 Motor-Show		1
4814.05	STAPLE (Carburettor Engine)	3	3
4814.08	PLATE, retaining	1	1
1565.16	STAPLE (Injection Engine)	3	
4816.07	HOSE, feed, length : 478 mm.	1	1
4818.20	PIPE, feed, intermediate, 3.34x4.76x375mm. (➤⊣ 404C:4.498.432, 4.595.630; all vehicles column A)	1	
4818.26	PIPE, feed, intermediate, 3.34 x 4.76 x 350 mm. (⊢➤ 404C:4.498.432, 4.595.630)	1	
4820.09	UNION, 3-way (➤⊣ 404C:4.498.432, 4.595.630; all vehicles model « A »)	1	
4820.13	UNION-SCREW, with adjutage		1
4820.14	UNION, adjustable, ◀▶ (See 46 GH)		1
4437.05	GASKET, 9.7 x 15.6 x 2 mm., regulator to adjustable union		1
4442.02	GASKET, 12.3 x 16 x 1.2 mm., adjustable union to union screw (Except 404/8)		1
	PIPE, 3.34 x 4.76 mm., brake feed :		
4822.20	length:680mm., ◀▶ ➤⊣ 404C:4.498.432, 4.595.630; all vehicles column « A »	1	
4822.21	length:780mm., ◀▶ ⊢➤ 404C:4.498.432, 4.595.630	1	
4822.26	length:475mm., ◀▶ , with screw-unions		1
4823.15	length:700mm., ◀▶ ⊢➤ 404C:4.498.432, 4.595.630	1	
	– ◀▶ ➤⊣ 404C:4.498.432, 4.595.630; all vehicles« column « A »	1	
	– intermediate (Except 404/8)		1
4823.20	length:950mm., ◀▶ , with screw-unions		1
4824.08	SCREW-UNION, 3/8" ➤⊣ 1968 Motor-Show (Except 404/8)	8	
4824.11	SCREW-UNION 1/2" ⊢➤ 1968 Motor-Show (Except 404/8)		1
4828.02	TUBE, plastic, split, 9 x 12 x 40 mm., protecting	2	2
4828.03	RUBBER, split, 4.5 x 8 x 20mm. : – rear brake feed pipe	2	2
	– intermediate brake feed pipe (Except 404C)	1	1
4834.33	CABLE with CONDUIT, rear brake, length:1818 mm. ➤⊣ 404XC5:5.073.666; XC6:5.570.281, 8.264.221; (USA):8.352.279, 8.355.199; all 404Coupler, Injection, A8, 404/8, C	2	2
4834.42	CABLE with CONDUIT, rear brake, length:3708 mm. ⊢➤ 404XC5:5.073.666; XC6:5.570.281, 8.264.221; (USA):8.352.279, 8.355.199 ➤⊣ 404XC7:5.621.817,8.268.571; (USA):8.352.345, 8.355.340		1
4834.47	CABLE with CONDUIT, rear brake, length:3628 mm. ⊢➤ 404XC7:5.621.817, 8.268.571		1
4861.04	REGULATOR, brake pressure ⊢➤ 404C:4.498.432, 4.595.630	1	
4861.05	REGULATOR, brake pressure ((USA) ➤⊣ 1967Motor-Show) (Other types ➤⊣ 1968 Motor-Show)		1
4861.07	REGULATOR, brake pressure ((USA) ⊢➤ 1967 Motor-Show) (Other types ⊢➤ 1968 Motor-Show and all 404/8)		1
4870.01	CAP		1
4870.02	CLAMP		1
4872.02	BRACKET		1
4874.01	PIN, articulation		1
4875.01	SHIM, adjusting, thk:0.5 mm. ➤⊣ 1968 Motor-Show		–
4875.02	SHIM, adjusting, thk:1 mm. ➤⊣ 1968 Motor-Show		–
4876.02	LEVER ASSY. ➤⊣ 404XC5:5.073.633; XC6:5.567.463, 8.264.008; (USA):8.352.915, 8.355.117; 404/8:6.909.666		1
4876.05	LEVER ASSY ⊢➤ 404XC5:5.073.004; XC6:5.530.711, 8.261.666; (USA):8.350.928 8.353.680; 404/8:6.907.574 (Fit 1 lever 4876.05 ➤⊣ 404XC5:		1
4877.12	SPRING and GRIP ASSY. 5.076.633; XC6:5.567.463, 8.264.008; (USA):8.352.915, 8.355.117		1
4877.04	SPRING and GRIP ASSY. ➤⊣ 404XC5:5.073.004; XC6:5.530.711, 8.261.666; (USA):8.350.928, 8.353.680; 404/8:6.907.574		1

BRAKES (ASSISTED) — PIPES, HOSES, UNIONS, ACTUATING, CABLES (REAR) (404L,404U6A)

Rear Axle	Brake Pressure Regulator		404L		404 U6A		
			XC5	XC6	Stand. Trans.	Auto. Trans.	
Worm and Wheel	Without	→ ↔	4.855.000 4.879.400		1.925.000 1.927.900		A
Hypoid	With	→ ↔ → ↔	4.879.400 4.884.000 7.120.000 7.120.994	4.884.000 4.895.000 6.820.000 6.878.721	(◁ *) 1.927.900 1.938.216	 7.100.000 7.102.015	
			all LXC7				B

4808.02	NUT, 5/8"	2	2
4809.02	WASHER, thrust, 16.3 x 24 x 2 mm.	1	1
1565.06	STAPLE (◠)	1	1
4813.16	PIPE, feed, main, 3.34 x 4.76 x 1870 mm. assy.	1	1
4814.05	STAPLE	3	3
4814.08	PLATE, retaining	1	1
4820.09	UNION, three-way	1	1
	HOSE or PIPE, brake feed :		
4816.07	flexible, length : 478 mm.	1	
4816.10	flexible, length : 399 mm.		1
4802.22	3.34 x 4.76 x 900 mm., intermediate		1
4821.01	3.34 x 4.76 x 100 mm., regulator outlet		1
4822.21	3.34 x 4.76 x 780 mm. :		
	– ◁	1	
	– ◁ (→ 404LXC5:4.859.144)	1	
4822.27	3.34 x 4.76 x 575 mm. :		
	– ◁		1
	– intermediate	1	
4823.22	3.34 x 4.76 x 1000 mm. ◁ (↦ 404LXC5:4.859.144 and all 404LXC6, LXC7, U6A)	1	
4823.21	3.34 x 4.76 x 1160 mm., ◁		1
4824.08	SCREW-UNION, 3/8"	8	8
4828.02	TUBE, split, plastic, 9 x 12 x 40 mm., protecting	4	4
4828.03	RUBBER, split, 4.5 x 8 x 20 mm. rear brake (→ 404LXC5:4.859.144; all 404U6A	2	2
	RUBBER, split, 4.5 x 8 x 20 mm. feed pipe (↦ 404LXC5:4.859.144; all 404LXC6, LXC7	4	4
	RUBBER, split, 4.5 x 8 x 20 mm. intermediate feed pipe	1	1
4834.34	CABLE with CONDUIT, rear brake-length : 1978 mm. (→ 404LXC5:TH:7.120.241; LXC6:TH:6.862.371; U6:4.788.224; U6A:1.937.830, 7.101.963	2	2
4834.48	CABLE with CONDUIT, rear brake-length : 3948 mm. (↦ 404LXC5:TH:7.120.241; LXC6:TH:6.862.371; U6:4.788.224; U6A:1.937.830, 7.101.963; all 404LXC7)		1
4861.06	REGULATOR, brake pressure		1
4870.01	CAP		1
4870.02	CLAMP		1
4872.03	BRACKET		1
4874.01	PIN, grooved		1
4875.01	SHIM, adjusting, thk : 0.5 mm.		–
4875.02	SHIM, adjusting, thk : 1 mm.		–
4876.02	LEVER ASSY. (→ 404LXC5:TH:7.120.239; LXC6:TH:6.862.060)		1
4876.05	LEVER ASSY. (↦ 404LXC5:TH:7.120.239; LXC6:TH:6.862.060; all 404LXC7)		1
4877.11	SPRING and GRIP ASSY. (fit 1 lever 4876.05 → 404LXC5:TH:7.120.239; LXC6:TH:6.862.060)		1

(*) → 404U6A (USA) :1.932.300, 7.100.100

Printed in France

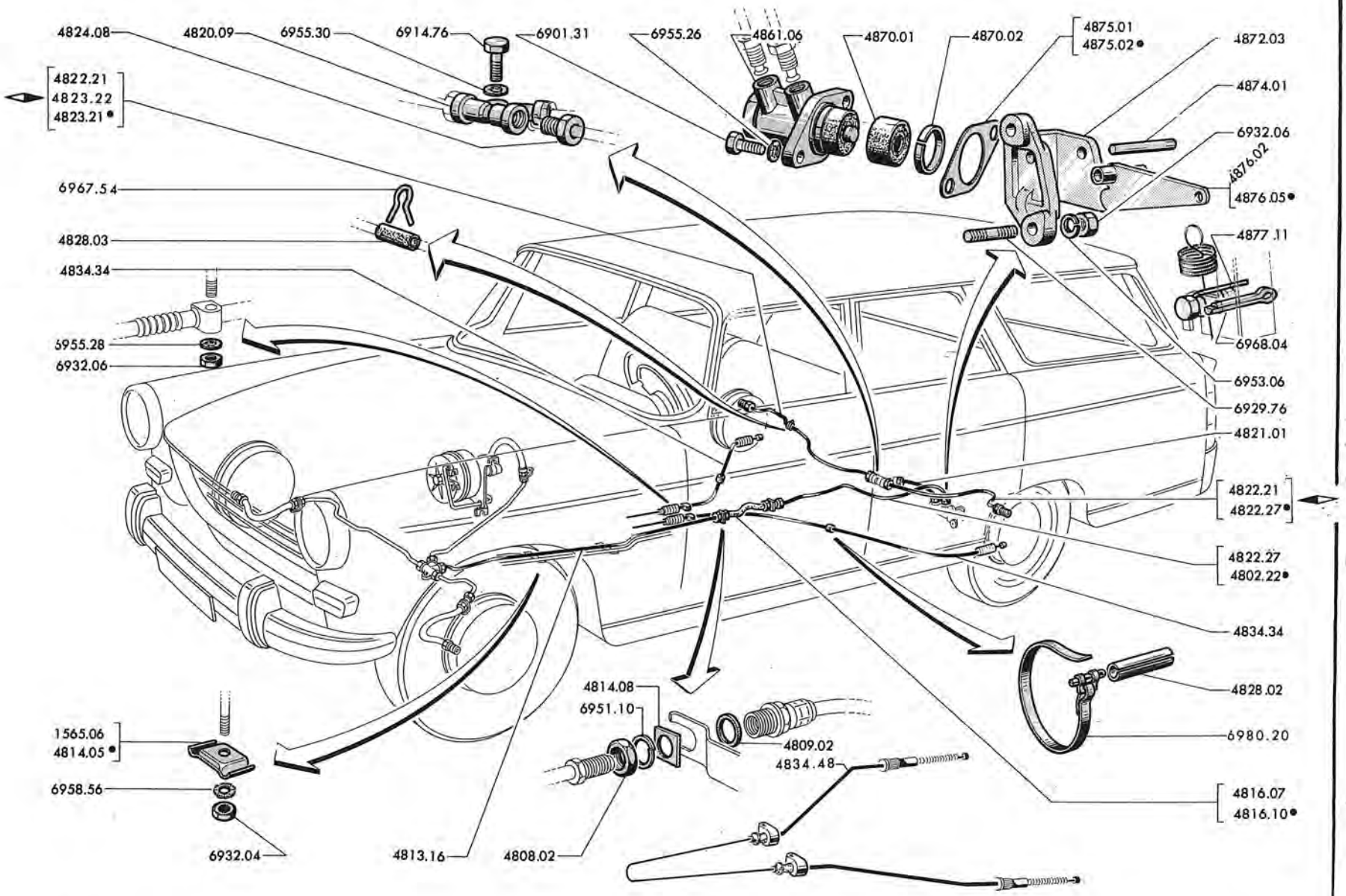
4824.08
4820.09
6955.30
6914.76
6901.31
6955.26
4861.06
4870.01
4870.02
4875.01
4875.02•
4872.03
4822.21
4823.22
4823.21•
4874.01
6932.06
4876.02
4876.05•
6967.54
4828.03
4834.34
4877.11
6968.04
6955.28
6932.06
6953.06
6929.76
4821.01
4822.21
4822.27•
4822.27
4802.22•
4834.34
4828.02
6980.20
4816.07
4816.10•
4814.08
6951.10
4809.02
4834.48
1565.06
4814.05•
6958.56
6932.04
4813.16
4808.02