SUSPENSION

9

FRONT SUSPENSION

REAR SUSPENSION

FRONT SPRINGS
CONVENTIONAL SUSPENSION

TYPE	Flexibility in mm for 100 kg	outer diameter in mm at base	Free Height in mm	Height in mm under a load of 318 kg	Reference Marks	P.N.
Saloons Up to serial numbers : **404** - 4 234 333 **404 J** - 4 506 712	44	143	316 to 327	184 to 187	1 yellow and 1 blue or 1 red	5001.41
404/8 L.H.D. and R.H.D. From beginning of series			327 to 338	187 to 192	1 white and 1 red or 1 white	5001.42
Saloons 404 R.H.D. **Saloons 404 L.H.D. «Argentine»** **Station Wagon** Up to serial Numbers : **404 U6** - 4 738 854 **404 U6D** - 4 908 381 **404 U6A** - 1 923 439	34	143.25	281.5 to 292.5	179.5 to 184.5	1 yellow and 1 green	5001.43*
Family Car «Africa» Up to serial Numbers : **404 L** - 4 852 163 **404 LD** - 4 980 058			292.5 to 303.5	184.5 to 189.5	1 blue and 1 green	5001.44
Station Wagons As from serial numbers : **404 U6** - 4 738 855 **404 U6D** - 4 908 382 **404 U6A** - 1 923 440 **Family Cars and Breaks «Africa»** As from serial Numbers : **404 L** - 4 852 164 **404 LD** - 4 980 059	34	143.25	300	187 to 192	2 blues	5001.55
Light Lorries From beginning of series : **404 U8** - 7 010 001 **404 U8D** - 7 040 001 **404 U10** - 7 060 001 **404 U10D** - 7 080 001				192 to 197	2 yellows	5001.56

* These parts are no longer suppl..d by the Spare Parts Department

FRONT SUSPENSION

IDENTIFICATION AND CHARACTERISTICS

FRONT SPRINGS

HIGH FLEXIBILITY SUSPENSION

TYPE	Flexibility in mm for 100 kg	Outer Diameter in mm at base	Free Height in mm	Height in mm under a load of 318 kg	Reference Marks	P.N.
Up to serial numbers : **404 (L.H.D. and R.H.D.)** 4 442 214 **404 J (L.H.D. and R.H.D.)** 4 528 596 **404 KF** 4 559 382 **404 C** 4 497 226 **404 C.KF** 4 592 428 **404 L (R.H.D.)** 4 842 516 **404 LD (L.H.D. and R.H.D.)** 4 976 387	80	162.5	442.5 to 457.5	198 to 203	2 whites	5001.45*
			457.5 to 472.5	203 to 208	1 red	5001.46
Up to serial numbers : **404 SL** : 4 440 829 **404 L** : 4 843 901	100	162	496.5 to 511.5	188.5 to 193.5	2 blue	5001.47
			511.5 to 526.5	193.5 to 198.5	2 yellow	5001.48
Since the beginning of series : **404 D** : 4 600 001 **404 DA** : 3 060 001 As from serial number : **404 LD** : 4 976 398	65	162.5	411.5 to 426.5	215 to 220	1 blue	5001.49
			426.5 to 441.5	220 to 225	1 yellow	5001.50
As from serial numbers : **404 (L.H.D. and R.H.D.)** 4 442 215 **404 SL** 4 440 830 **404 ZF** 8 250 001 **404 J (L.H.D. and R.H.D.)** 4 528 597 **404 KF** 4 559 383 **404 C** 4 497 227 **404 C.KF** 4 592 429 **404) (L.H.D. and R.H.D.)** 4 843 902 **404 U6A** 1 928 101	85	162.35	459.25 to 474.25	199 to 204	1 white and 1 yellow	5001.51
			474.25 to 489.25	204 to 209	1 white and 1 blue	5001.52

* These parts are no longer supplied by the Spare Parts Department

FRONT SHOCK ABSORBERS

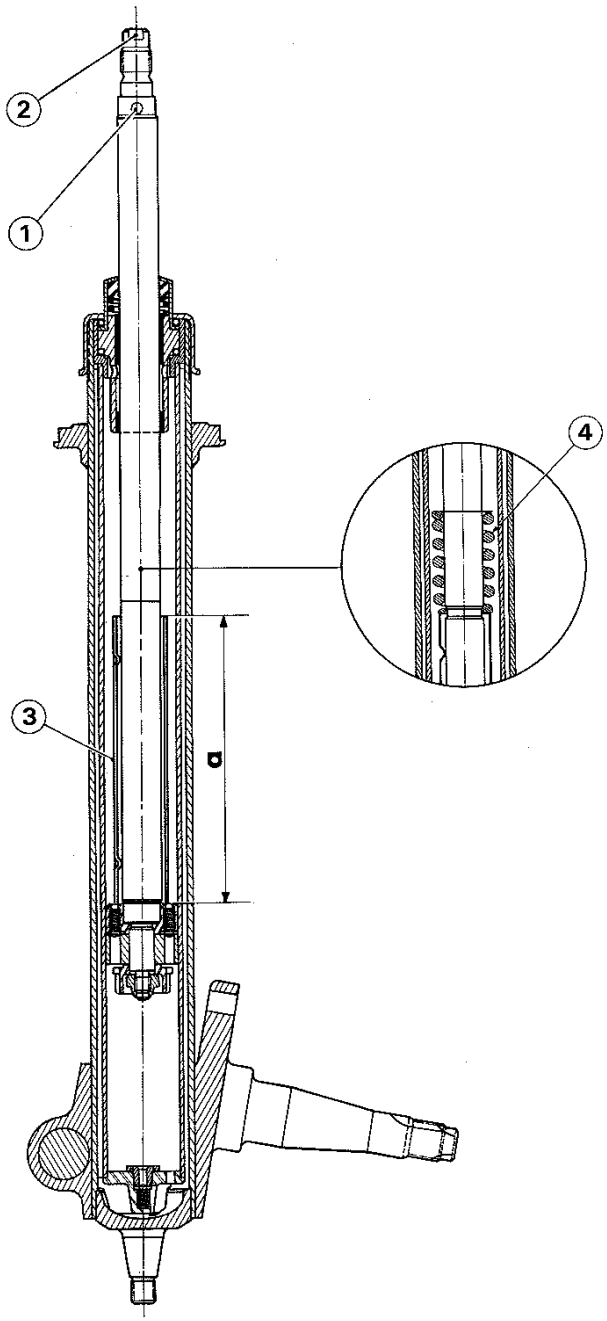

Up to serial numbers :

404 - 4 016 996
404 J - 4 500 607

1 - Air pressure release hole perpendicular to the flat.

2 - Upper flat

3 - Thrust washer a = 140.5 mm

404 - from N° 4 016 997 to N° 4 234 333
404 J - from N° 4 500 608 to N° 4 506 712

1 - Air pressure release hole perpendicular to the flat.

2 - Upper flat

3 - Spacer a = 108.75

4 - Thrust spring.

FRONT SUSPENSION

IDENTIFICATION AND CHARACTERISTICS

FRONT SHOCK ABSORBERS

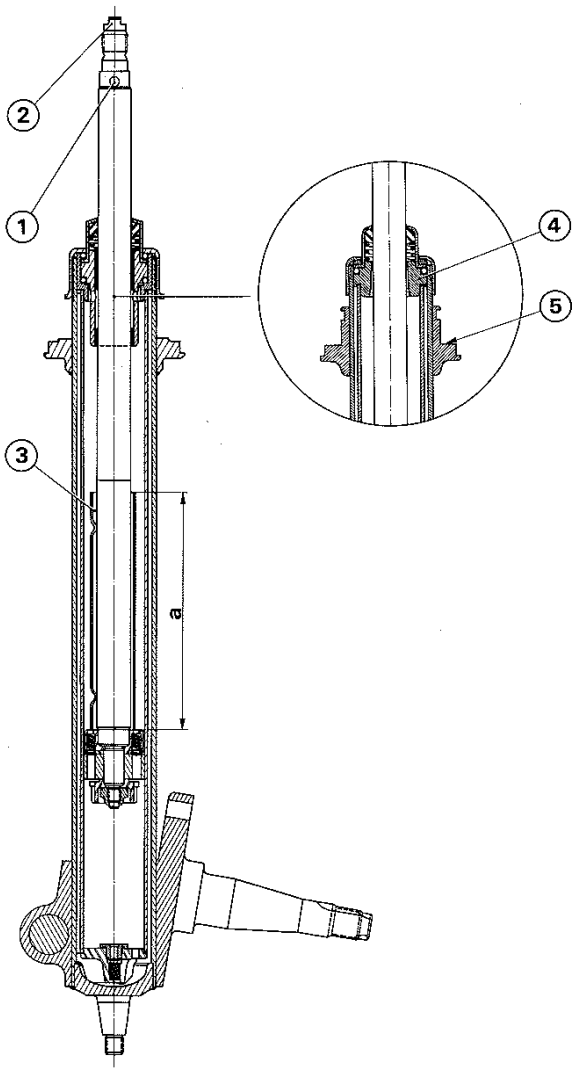

* **404**	from n° 4 260 001 to n°	5 047 268
* **404 J**	from n° 4 525 001 to n°	4 529 915
* **404 KF**	from n° 4 550 001 to n°	4 570 595
* **404 D**	from n° 4 600 001 to n°	4 605 479
* **404 C**	from n° 4 490 001 to n°	4 497 653
* **404 C.KF**	from n° 4 590 001 to n°	4 594 063
* **404 L**	from n° 4 825 001 to n°	4 851 758
* **404 LD**	from n° 4 975 001 to n°	4 980 000
404 U6	from n° 4 700 001 to n°	4 737 899
404 U6D	from n° 4 900 001 to n°	4 908 257
404 U6A	up to serial number	1 923 363

1 - Air pressure release hole parallel to the flat.

2 - Upper flat

3 - Thrust spacer a = **141.5 mm**

404	from n° 5 047 269 to n°	**TW** 5 065 743 **TH** 5 263 945
404 J	from n° 4 529 916 to n°	4 537 076
404 KF	from n° 4 570 596 to n°	8 215 315
404 D	from n° 4 605 480 to n°	4 616 890
404 C	from n° 4 497 654 to n°	4 499 093
404 C.KF	from n° 4 594 064 to n°	4 598 325
404 L	from n° 4 851 759 to n°	4 875 059
404 LD	from n° 4 980 001 to n°	4 983 135
404 U6	from n° 4 737 900 to n°	4 758 099
404 U6D	from n° 4 908 258 to n°	4 913 133
404 U6A	from n° 1 923 364 to n°	1 927 379
404 ZF	since beginning of series	8 250 140
404 L Break	since beginning of series	4 874 880

1 - Air pressure release hole perpendicular to the flat

2 - Upper flat

3 - Thrust spacer a = 155 mm

4 - Rod upper bearing

5 - Needle bearing

* Introduction in series of the high flexibility suspension.

SUSPENSION

IDENTIFICATION AND CHARACTERISTICS

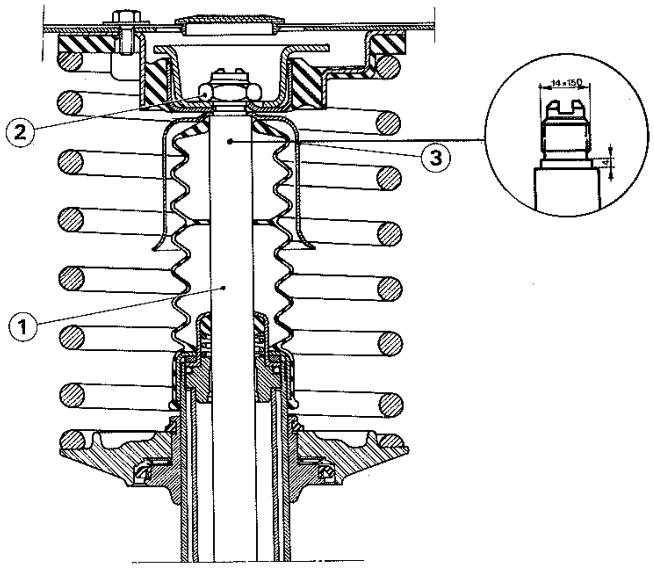

404 (TW)	from n° 5 065 744	to n° 5 075 000
404 (TH)	from n° 5 263 946	to n° 5 331 000
404 J	from n° 4 537 077	to n° 4 537 191
404 KF	from n° 8 215 316	to n° 8 224 862
404 D	from n° 4 616 891	to n° 4 619 852
404 ZF	from n° 8 250 141	to n° 8 251 300

As from serial numbers :

404 C	: 4 499 094
404 C.KF	: 4 598 326
404 L	: 4 875 060
404 L (Break)	: 4 874 881
404 LD	: 4 983 136
404 U6	: 4 758 100
404 U6D	: 4 913 134
404 U6A	: 1 927 379
404 U8 & U8D **404 U10 & U10D**	since the beginning of series

1 - The rod incorporates a holding slot and a thread of 14 × 150 diameter in place of 16 × 150

2 - Collar nut of 21 mm across flats

3 - Deflector

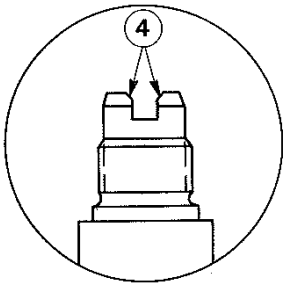

As from serial numbers :

404 (TW)	: 5 075 001
404 (TH)	: 5 311 001
404 SL	: 5 311 006
404 D	: 4 619 853
404 KF	: 8 224 863
404 ZF	: 8 251 301

Installation for suspension equipped with front and rear anti-roll bar

4 - Slot with chamfer edges on the shock absorber rod.

NOTE *: The thread diameter of the shock absorber closing nut is of 50.9 mm in place of 50.6 mm.*

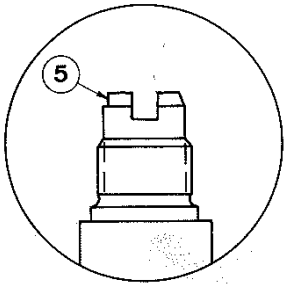

Since the beginning of series

404/8 : 6 900 001

5 - One single flat parallel to the rod.

FRONT SUSPENSION

IDENTIFICATION AND CHARACTERISTICS

FRONT SPRINGS LOWER SEATING CUP
404 WITH CONVENTIONAL SUSPENSION

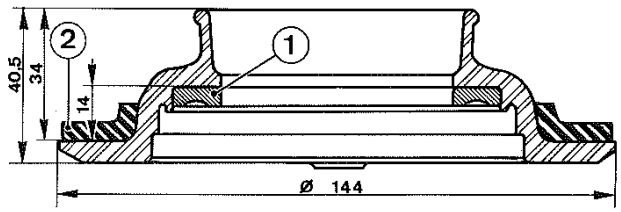

P.N. 5033.09

404 Saloons with L.H.D.

Up to serial numbers :

404 : 4 022 807
404 J : 4 501 029

1 - Ball bearing upper track

2 - Spring lower rubber seating cup

NOTE *: This cup is not supplied by the Spare Parts Department.*

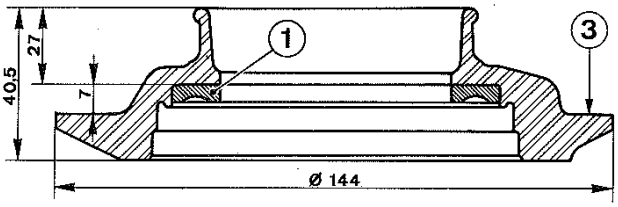

P.N. 5033.10

404 Saloons with L.H.D.

404 : from n° 4 022 808 to n° 4 234 333
404 J : from n° 4 501 030 to n° 4 506 712

3 - Without spring lower seating cup

INTERCHANGEABILITY : This cup may be fitted to replace the former one on condition that the modification is carried out on both sides of a given car and that the rubber seating cups are removed.

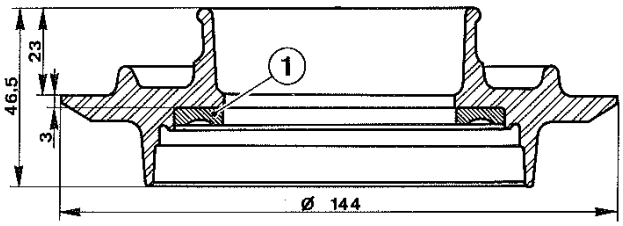

P.N. 5033.11

404 Saloons R.H.D.

Up to serial numbers :

404 : 4 234 333
404 J : 4 506 712

404 Station Wagons and Family Cars « Africa »

Up to serial numbers :

404 U6	4 737 899
404 U6D	4 908 257
404 U6A	1 923 363
404 L « Africa »	4 851 758
404 LD « Africa »	4 980 000

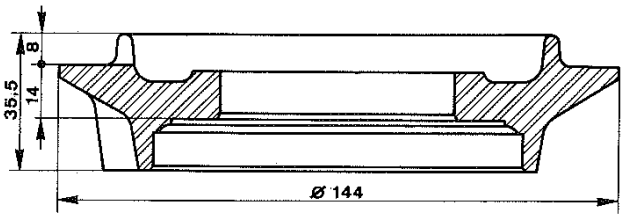

P.N. 5033.16

404 Station Wagons and Family Cars « Africa »

As from serial numbers :

404 U6	4 737 900
404 U6D	4 908 258
404 U6A	1 923 364
404 L « Africa »	4 851 759
404 LD « Africa »	4 980 001

Light Lorries 404

404 U8 & **U8D** Since beginning
404 U10 & **U10D** of the series.

404/8 Saloons

404/8 - since the beginning of the series
- Cups without ball bearing upper track

INTERCHANGEABILITY : This cup, which must be fitted with **a ball bearing,** is not interchangeable with the former models.

FRONT LOWER SPRINGS SEATING CUP
404 WITH HIGH FLEXIBILITY SUSPENSION

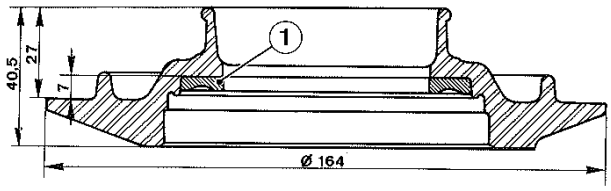

P.N. 5033.12

404 Saloons; Convertibles and Coupés (L.H.D. and R.H.D.)

Up to serial numbers :

404	5 047 268
404 SL	5 100 022
404 J	4 529 915
404 KF	4 570 595
404 D	4 605 479
404 C	4 497 653
404 C.KF	4 594 064

1 - Ball bearing upper track

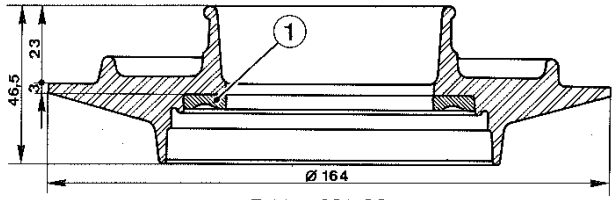

P.N. 5033.13

404 Family Car (except "Africa" type)

Up to serial numbers :

404 L	4 851 758
404 LD	4 980 000

- of a modified form.

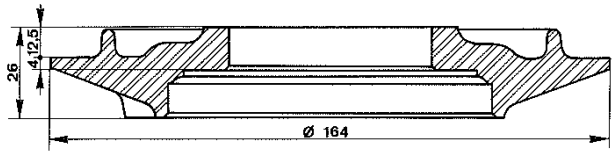

P.N. 5033.14

404 Saloons, Convertibles and coupés (L.H.D. and R.H.D.) - As from serial numbers :

404	5 047 269
404 SL	5 100 023
404 J	4 529 916
404 D	4 605 480
404 C	4 497 654

404 KF : from n° 4 570 596 to n° 8 209 499
404 C.KF : from n° 4 594 065 to n° 4 597 911

- Cups without ball bearing upper track

INTERCHANGEABILITY : This cup which must be fitted with a **ball bearing** is not interchangeable with the former models.

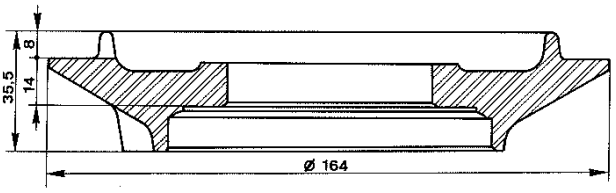

P.N. 5033.15

404 Family Cars and Breaks (except "Africa" type)

As from serial numbers :

404 L	: 4 851 759
404 LD	: 4 980 001
404 L (Break)	: 4 855 001 (beginning of series)

404 Saloons, Convertibles and Coupés Fuel Injection engine

As from serial numbers :

404 KF	: 8 209 500
404 C.KF	: 4 597 912

- Cup without ball bearing lower track.

INTERCHANGEABILITY : May be fitted on 404 Fuel Injection Engine to replace the former cup provided the modification is carried out on both sides of a given car.

FRONT SUSPENSION

REMOVAL

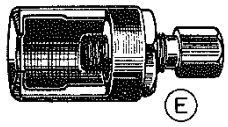

TOOLS TO BE USED

Tool Chest n° 8.0703 X

E - Ball joint extractor.

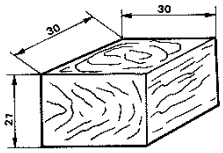

This tool is to be made in the workshop

0.0604
- Wooden block to be placed between rebound block and cross member stop.

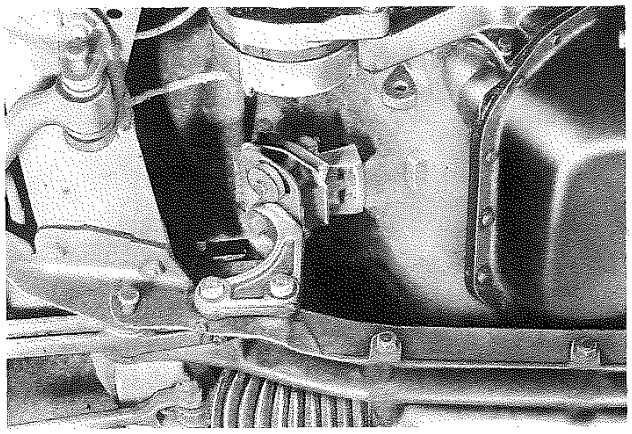

REMOVING THE SUSPENSION ELEMENT

- Place the vehicle on a pit or on a car lift.
- Slacken the front wheel
- Remove the anti-roll bar bushing
- Uncouple the anti-roll bar from the connecting link
- Slacken the front and rear suspension shaft nuts
- Drive the shafts out until they flush with the cross member and the front clamp.
- Raise the car from the front using a chain hoist
- Remove the front and rear suspension shafts using a drift.

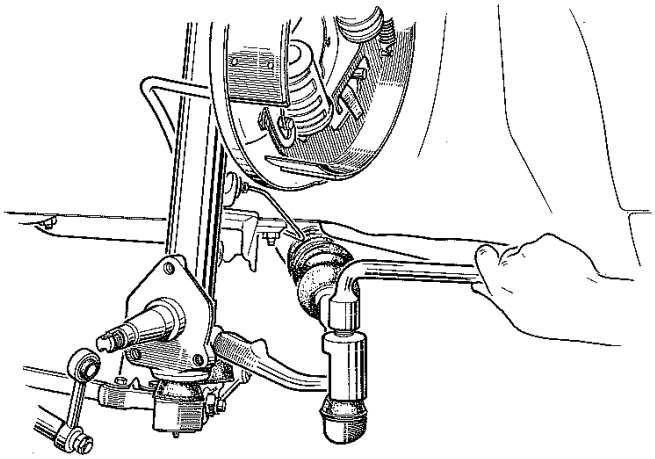

- Raise the car from the front and choke
- Remove :
  - the wheel and mark its position in relation to the hub.

Drum brakes
- the hub/drum brake
- the brake plate using a 10 mm or 8 mm Allen extension since October 1967.

Disc brakes
- the brake caliper
- the hub/brake disc
- the caliper support and the disc shield using an Allen extension of 8 mm.

***NOTE** : If no work is required on the brakes, it is not necessary to disconnect the flexible hose. (Do not spill any grease on the brake linings)*

- Uncouple the connecting rod ball joint using ball joint extractor **8.0703 X**
- Remove the three upper bolts securing the suspension assembly to the wing valance and hold the assembly in position.
- Remove the suspension element and the triangle arms.

FRONT SUSPENSION

REFITTING

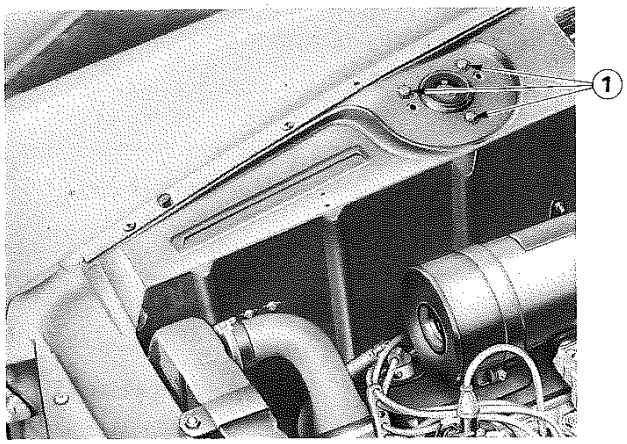

REFITTING A SUSPENSION ELEMENT

- Place the suspension element under the wing valance.
- Position the safety cup water drain hole towards the engine.
- Secure the suspension element to the wing valance using three **new** bolts **1** equipped with double teeth washers.

  Tightening torque : **9 ft.lbs** (1.25 m.kg)
- Block the wing valance centre hole using a special plug.

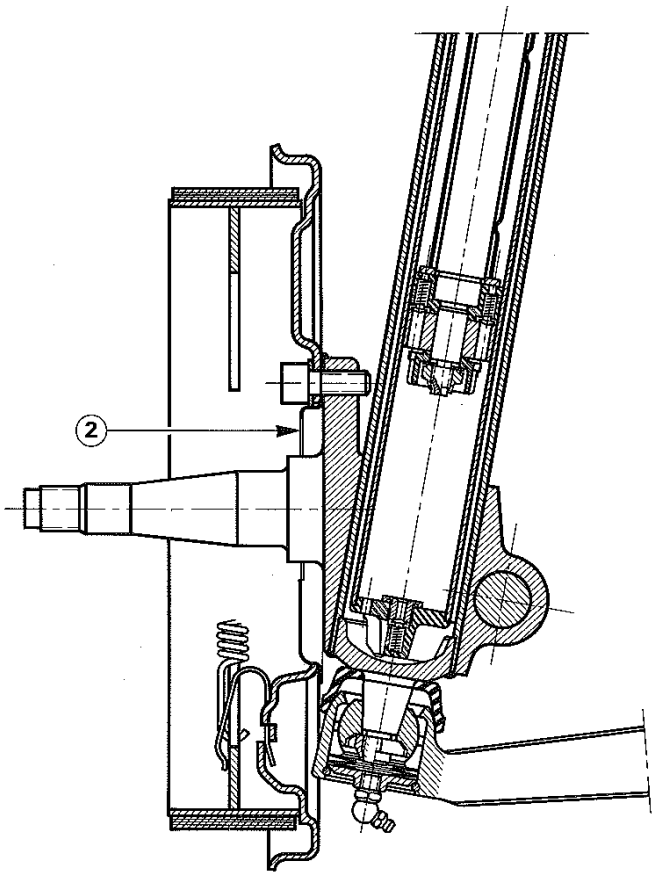

- Place the front and rear triangle arms in position
- Insert a **new** front triangle arm pivot, with the head facing the front, up to the splining.

Drum brakes
- Install the brake plate with the grease trap **2** placed between the brake plate and the steering knuckle.

Disc brakes
- Install the disc shield and the caliper support.
- Use **new** bolts and washers
  Tighten to **40 ft.lbs** (5.5 m.kg) using an Allen socket of 10 mm for drum brakes and one of 8 mm for disc and drum brakes fitted as from October 1967.
- Lock the three bolts by punch marking the threads.
- Install the hub/drum or hub/disc
- Tighten the steering knuckle nut to **22 ft.lbs** (3 m.kg) then slacken and apply the final torque **7.25 ft.lbs** (1 m.kg)
- Carefully lock the nut in the notches provided.
- Fit the hub cap smeared with Esso Multipurpose Grease H.
- Install the brake disc caliper and tighten the securing nuts to **51 ft.lbs** (7 m.kg) for Girling brake caliper and **40 ft.lbs** (5.5 m.kg) for Bendix brake caliper.
- Refit the wheel according to the positioning mark made at dismantling.

FRONT SUSPENSION

REFITTING

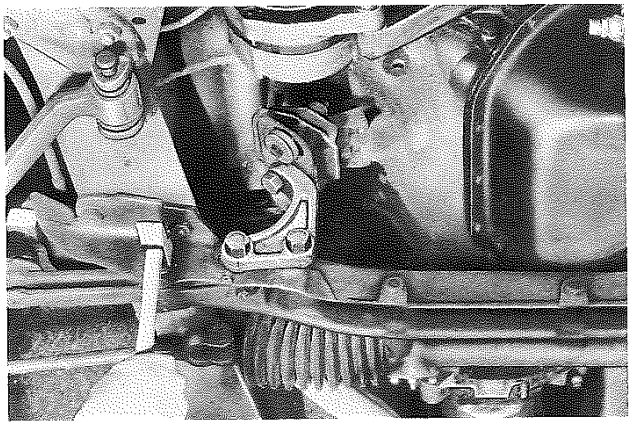

- With the vehicle resting on its wheels, centre the rear arm silentbloc bushes using a spigot.
- Insert the pivot from the front until it is correctly centred.
- Place the 21 mm block **0.0604** between the rebound block and the cross member thrust stop.
- Load the vehicle at the front until the block is held between the rebound block and the thrust stop. The silentbloc bushes are now in a neutral position.
- Drive in the front and rear arm pivots.
- Tighten the nuts :
  - front arm on yoke **58 ft.lbs** (8 m.kg)
  - rear arm to cross member **62 ft.lbs** (8.5 m.kg)
- Pin the pivots.

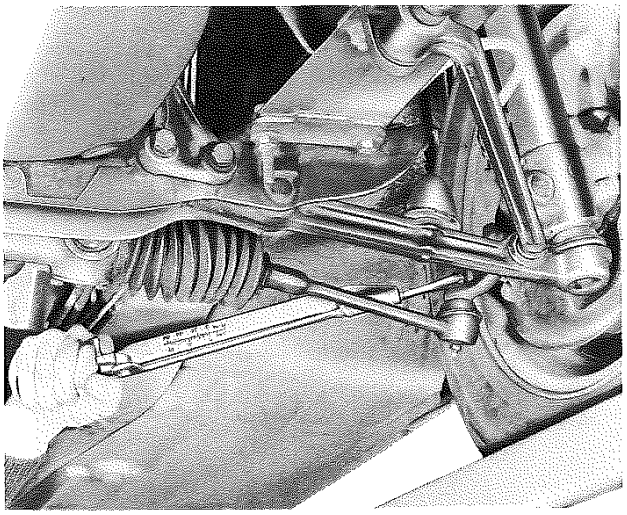

- Couple the track rod with the track arm
  - tighten the nut to **31 ft.lbs** (4.25 m.kg)
  - pin it
- Couple the anti-roll bar with the connecting link.
  - tighten the nut to **33 ft.lbs** (4.5 m.kg)
  - fit and secure a «Pal» lock nut
- Install the anti-roll bar bushing and tighten the bolts to **9 ft.lbs** (1.25 m.kg)
- Tighten the wheel nuts to **43.5 ft.lbs** (6 m.kg) for Saloon cars and **58 ft.lbs** (8 m.kg) for Associated vehicles.
- Bleed the brakes (if the flexible hose was disconnected at the removal of the brake plate)
- Check and adjust the parallelism if necessary **Toe in 2 mm ± 1.**

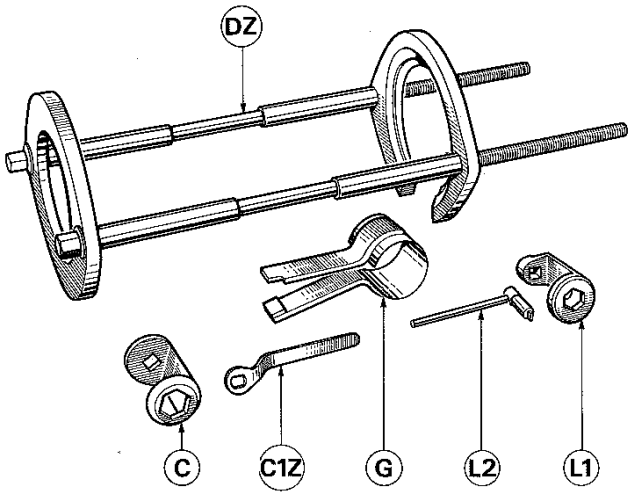

TOOLS TO BE USED

For dismantling and refitting

Tool Chest N° 8.0902 V

C - Shock absorber rod nut wrench (1st fitting)

C1Z - Shock absorber rod holding clamp.

DZ - Spring compressor

G - Clamp

L - Shock absorber rod nut wrench (2nd fitting)

L1 - Nut wrench

L2 - Shock absorber rod holding socket.

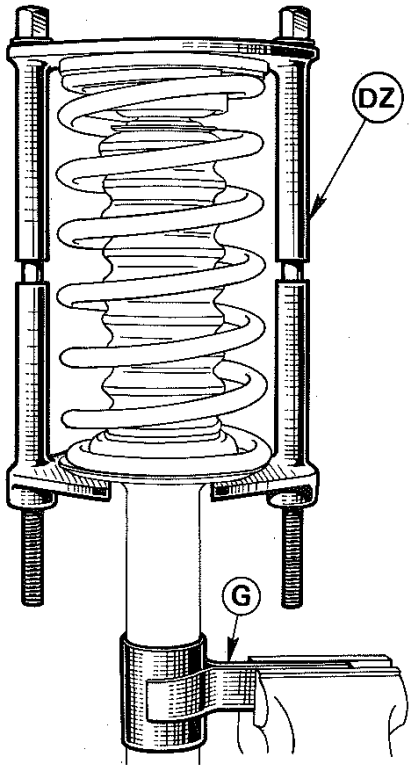

DISMANTLING A SUSPENSION ELEMENT

- Place clamp **G** on the steering knuckle body.
- Hold the element in a vice using clamp **G.**
- Compress the spring using apparatus **DZ.**

FRONT SUSPENSION

DISMANTLING

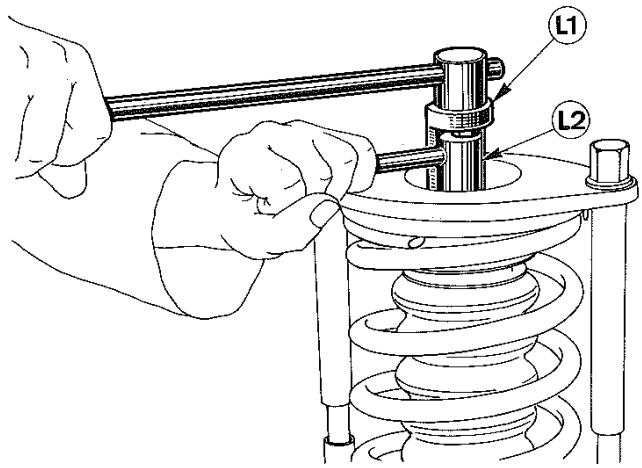

- Slacken and remove the rod nut using the combination wrench i.e.
  - **C** and **C1Z** for the 1st fitting
  - **L1** and **L2** for the 2nd fitting
- Remove the rubber boot lower securing collar if necessary.

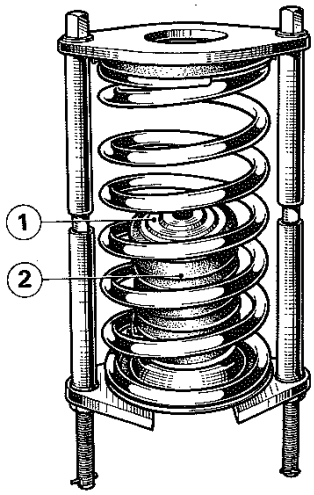

1st Fitting

- Remove compressor **DZ** and then the following parts :
  - safety or seating cup
  - shock absorber upper support
  - suspension spring
  - cup 1
  - rubber boot 2
  - spring lower thrust cup.
- Remove the ball bearing and its seal.

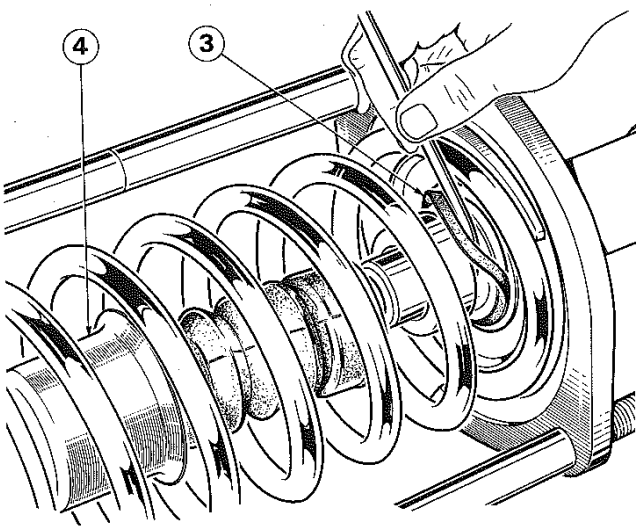

2nd Fitting

- Remove :
  - the rubber boot from the shock absorber nut
  - the upper seal ring **3** using a bent scriber
- Remove apparatus **DZ** and then the following parts held between its clamps
  - the safety or seating cup
  - the shock absorber upper support
  - the upper deflector 4
  - the rubber boot
  - the suspension spring
  - the upper seal ring
  - the spring lower seating cup.
- Remove the needle thrust bearing and its seal.

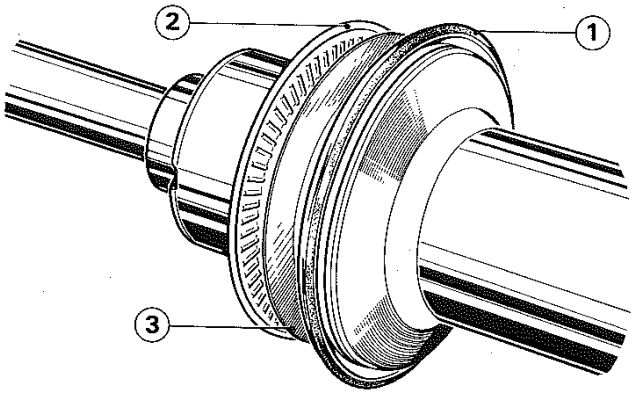

RE-ASSEMBLY OF A SUSPENSION ELEMENT

- Using Esso Multipurpose Grease H, lubricate the needle thrust bearing or the ball cage.
- Fit the following parts in the order indicated below :
  - thrust **1** rubber seal
  - needle bearing **2** with its washer **3** facing the steering knuckle or the ball cage and its seal for the 1st fitting shock absorbers.

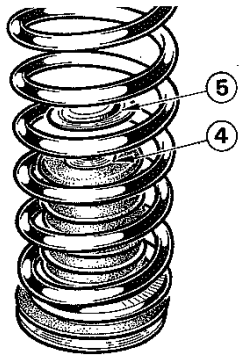

1st fitting

- Engage upper attachment cup 4 into the rubber boot.
- For handling purposes secure attachment cup **4** and cup **5** using Bostik or Dynadère glue.
- Using the clamp secure the rubber boot to the spring lower seating cup.
- Place the spring on the lower seating cup.

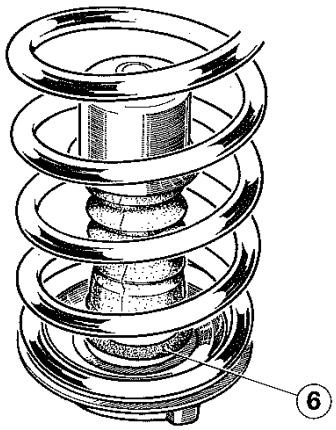

2nd fitting

- Place the spring on the lower seating cup.
- Place the following inside the spring.
  - the upper seal ring of cup **6**
  - the rubber boot
  - the upper deflector.

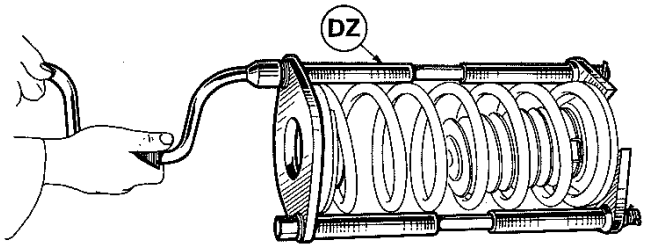

- Place the shock absorber upper support on the spring.
- Place the safety cup with its notch in the groove support.
- Compress this assembly using apparatus **DZ.**

FRONT SUSPENSION

RE-ASSEMBLY

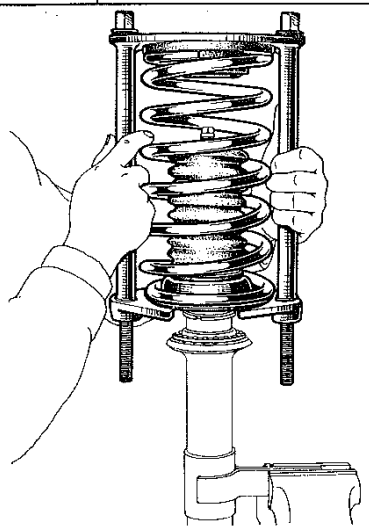

- Centre the spring assembly correctly on the shock absorber.
- Avoid applying pressure on the rod in order not to push it downwards.
- When the lower spring seating rests on the bearing, the shock absorbers rod thread should appear through the safety cup.

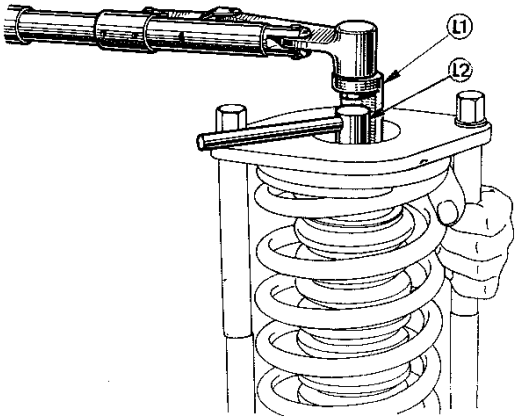

- Engage a **new** nut and using combination wrench **C** and **C1Z** for the 1st fitting or **L1** and **L2** for the 2nd fitting. Tighten to **40 ft.lbs** (5.5 m.kg) for Elbe nut dia. 16 × 150 and to **33 ft.lbs** (4.5 m.kg) for collar nut dia. 14 × 150
- Lock the lock nut in the countersunk of the shock absorber rod.
- Remove apparatus **DZ.**

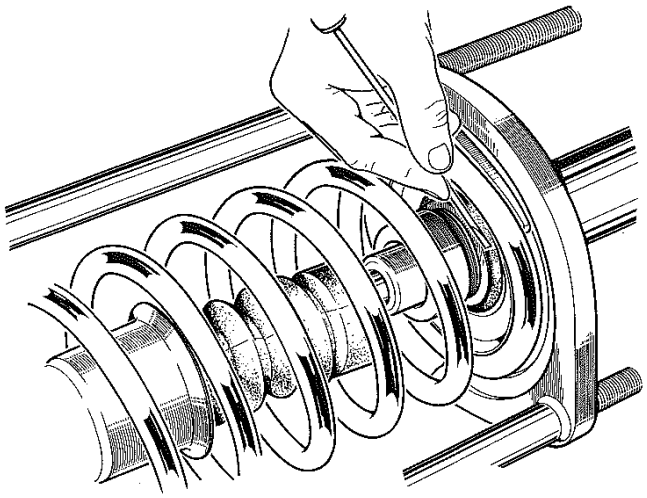

Particularities of the 2nd fitting

- Place the upper seal ring of the cup on the shock absorber body.
- Engage the rubber boot on the shock absorber nut.

NOTE *: For the arms removal refer to class 6 page 06 01.*

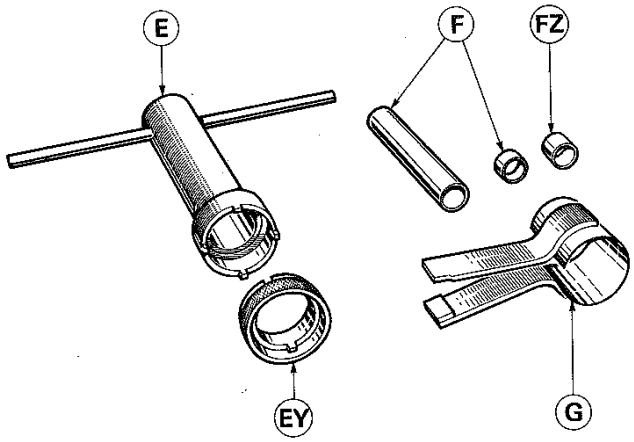

TOOLS TO BE USED

Tool Chest N° 8.0902 V

E - Shock absorber closing nut wrench (1st fitting).

EY - Shock absorber closing nut socket (2nd fitting) used with wrench **E.**

F - Spacer { 1 of 175 mm / 1 of 15 mm }

FZ - Spacer 25 mm

G - Clamp

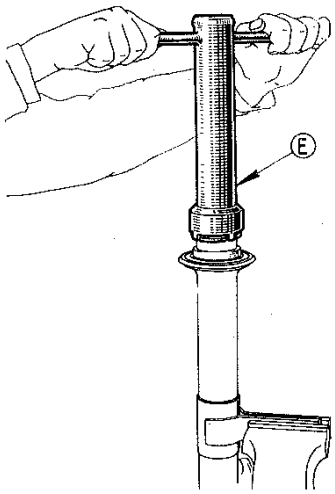

DISMANTLING

- Remove and take apart the suspension element
- Place clamp **G** on the steering swivel body
- Hold the assembly by means of the clamp secured in a vice.
- Remove the shock absorber body closing nut using the corresponding wrench, i.e.
  - **E** - nut wrench (1st fitting)
  - **EY** - socket (2nd fitting) and nut wrench **E.**

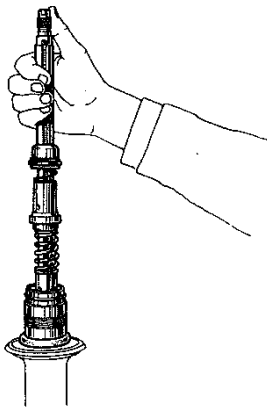

- Pull the piston rod slowly so that oil does not splash and then remove rod/piston assembly.

Remove the steering swivel body from clamp **G.**

- Drain the cylinder and the shock absorber body.
- After draining is accomplished, remove cylinder/shock absorber valve support assembly.

FRONT SUSPENSION

FRONT SHOCK ABSORBERS

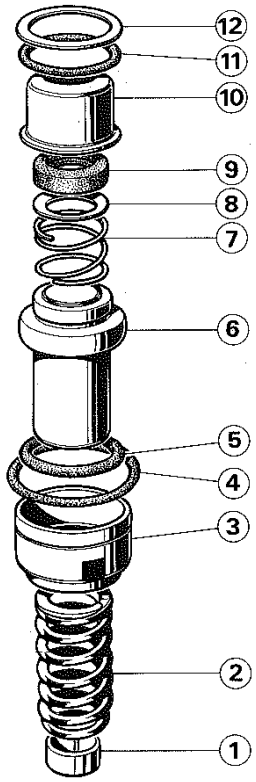

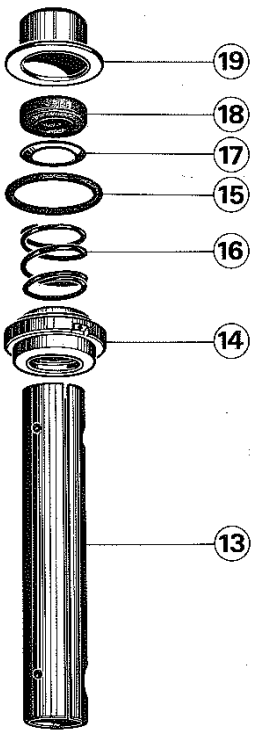

RE-ASSEMBLY

Either of the following cases may be encountered :

1 - New shock absorber body and steering swivel assembly and shock absorber recovered from a dismantled element.

2 - Shock absorber and steering swivel assembly recovered from a dismantled element and new shock absorber mechanism.

Particular precautions to be taken for case N° 1

a - Ensure that the shock absorber rod is not bent, any rod showing scratches or signs of bending should be replaced. Replace all rubber seals on the shock absorber mechanism and lightly smear them with tallow before installation.

b - Install thrust bearing seal on the shock absorber body.

- Use the rod and piston assembly as supplied by the Spare Parts Department (case n° 2) or after all the seals are replaced (case n° 1).
- Install the following on the shock absorber body.

with a swivel bearing

- rod spacer **1**
- spring **2** (if fitted)
- spacer of cylinder **3** with its seal **4**
- bearing seal **5**
- bushing **6**
- upper spring **7**
- spring **8** thrust washer (convex face towards spring)
- rod seal **9** making sure that it is correctly positioned (a circular groove is used to indicate the bearing face of washer **8**)
- support cup **10**
- bearing seal **11**
- nut thrust washer **12**

with a fixed bearing

- rod spacer **13**
- bearing **14** with its seal **15**
- upper spring **16**
- thrust washer **17** (convex face towards spring)
- rod seal **18** making sure that it is correctly positioned (a circular groove indicates the bearing face of washer **17**.
- support cup **19**
- thrust washer (if fitted)

***NOTE** : Lightly smear the lips of the rod seal ring 18 using «Molykote».*

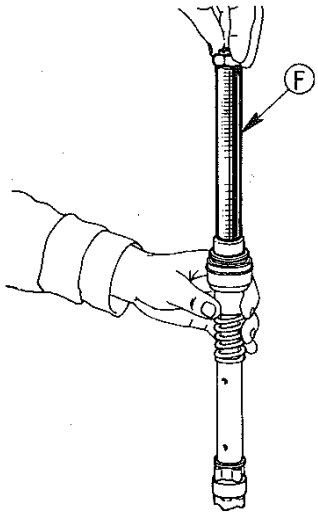

- Install in the rod previously equipped with spacer **F** or **F + 15 mm** or **F + FZ** according to the shock absorber type, and compress the rod seal spring by tightening the nut until the cup comes into contact with the bushing.

  This precaution must be taken as it prevents the thrust washer from being distorted, when tightening the closing nut, thus causing damage to the upper seal ring.

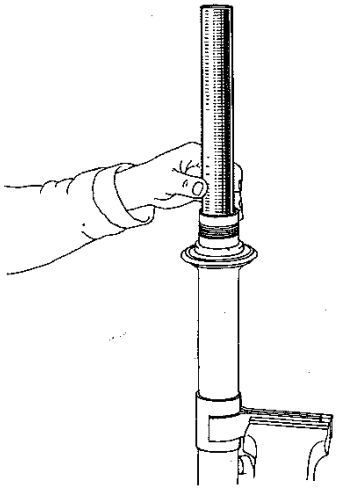

- Thoroughly clean the inner part of the shock absorber body.
- Place clamp **G** on the swivel
- Install the swivel vertically in clamp **G** held in a vice.
- Insert in the shock absorber body the cylinder equipped with the valve support after careful cleaning.
- Pour 350 cm3 of Esso Oleofluid 40S into the shock absorber body.

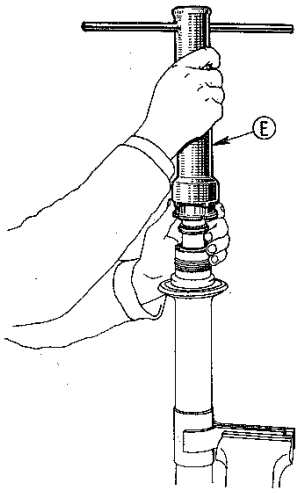

- Insert the mechanism into the cylinder (press it home gradually to avoid any loss of oil).
- Install the closing nut using wrench **E** and the corresponding socket. Tighten to **58 ft.lbs** (8 m.kg).
- Slacken the rod nut and remove shims **F** and **FZ.**
- Manoeuvre the shock absorber rod by hand to ensure that it slides and rotates correctly.
- When installing the spring the rod should be kept at its maximum protrusion position.

REAR SUSPENSION

IDENTIFICATION AND CHARACTERISTICS

REAR SPRINGS SALOONS - CONVERTIBLES AND COUPES

TYPE	Flexibility in mm for 100 kg	Outer Diameter in mm at the base	Free Height in mm	Height in mm under a load of 318 kg	Ref. Mark	P.N.
Up to serial numbers : **404 (L.H.D.)** 4 022 807 **404 J (L.H.D.)** 4 501 029	52	133	404 to 415	245 to 250	1 blue	5101.66(1)
			415 to 430	250 to 255	1 yellow	5101.67*
As from serial numbers : **404 (L.H.D.)** 4 022 808 **404 J (L.H.D.)** 4 501 030 **404/8 (L.H.D.)** 6 900 001	52	133	395 to 410	240 to 245	1 green	5101.68
			410 to 425	245 to 250	2 green	5101.66(1)
404 Saloons R.H.D. All types	46	133	391.5 to 402.5	251 to 256	1 blue and 1 red	5101.69
			402.5 to 413.5	256 to 261	1 yellow and 1 red	5101.70
404 Convertibles and Coupés All models	52	133	389 to 400	230 to 235	1 blue	5101.72
			400 to 411	235 to 240	1 yellow	5101.71

1 - These springs having the same height under load are interchangeable
* - This spring is no longer delivered by the Spare Parts Department

REAR SUSPENSION

IDENTIFICATION AND CHARACTERISTICS

REAR SPRINGS ASSOCIATED VEHICLES
I - HELICAL SPRINGS

TYPE	Flexibility in mm for 100 kg	Outer Diameter in mm at base	Free Height in mm	Height in mm under load		Ref. Marks	P.N.
Family Cars L.H.D. All models **Station Wagons U.S.A. L.H.D.** As from serial n° : **404 U6A** 1 928 101	92	120.7	416.5 to 431.5	214.5 to 219.5	Under a load of 230 kg	1 red and 1 white	5101.73
			431.5 to 446.5	219.5 to 224.5		1 blue and 1 yellow	5101.74
Station Wagons L.H.D. & R.D.H. All models **Station Wagons «Africa»** Up to serial n° **404 U6** 4 748 727 **Station Wagons USA** up to serial N° **404 U6A** 1 928 100 **Family Cars R.D.H.** all models **Family Cars «Africa»** Up to serial n° : **404 L** 4 862 397 **404 LD** 4 981 417	75	121.25	398.5 to 413.5	236 to 241		1 red	5101.75
			413.5 to 428.5	241 to 246		1 white	5101.76
Station Wagons and Family Cars «Africa» As from serial n° **404 U6** 4 548 728 **404 L** 4 862 398 **404 LD** 4 981 418	50	122.25	370 to 385	221 to 226	Under a load of 318 kg	1 blue	5101.80
			385 to 400	226 to 231		1 yellow	5101.81

II - LEAF SPRINGS

TYPE	Flexibility in mm for 100 kg	Number of leaves	Width in mm	Height in mm	Deflection	P.N.
404 U8 & U8D	17 to 31	8	50	62 ± 2	27 mm under 650 kg	5101.54
404 U10 & U10D	15 to 28	8	50	64 ± 2	27 mm under 725 kg	5101.88

REAR SHOCK ABSORBERS SALOONS

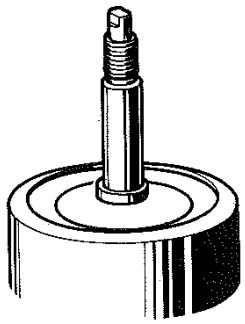

Conventional suspension fitting

Up to serial numbers :

404 - 4 234 333
404 J - 4 506 712

- Shock absorber without a reference mark.

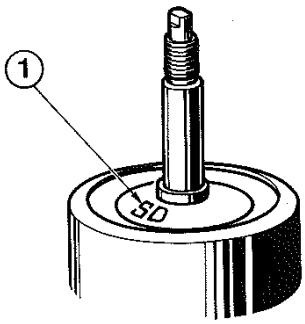

Fitting for suspension equipped with front anti-roll bar.

As from serial numbers :

404	4 260 001
404 J	4 525 001
404 D	4 600 001
404 KF	4 550 001
404 C	4 495 001
404 C.KF	4 590 001

1 - Letters SD on bearing cap

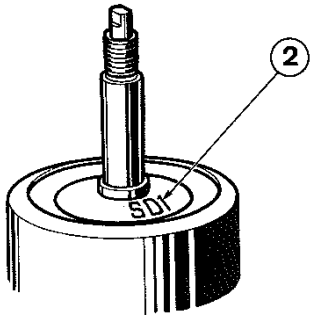

Fitting for suspension equipped with front and rear anti-roll bars.

As from serial numbers :

404 (TW)	5 075 001
404 (TH)	5 311 001
404 SL	5 311 006
404 D	4 619 853
404 KF	8 224 863
404 ZF	8 251 301

2 - Letters SD on bearing cap.

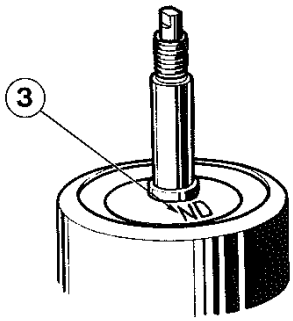

Fitting for conventional type suspension 404/8

As from serial number :

404/8 6 900 001 (beginning of series)

3 - Letters ND on bearing cap.

REAR SUSPENSION

IDENTIFICATION AND CHARACTERISTICS

REAR SHOCK ABSORBERS ASSOCIATED VEHICLES

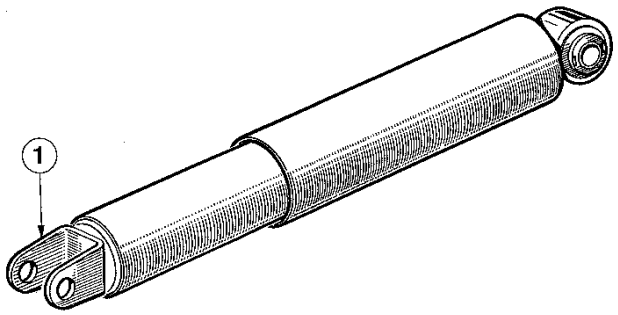

P.N. 5205.35

Family Saloons and Station Wagons without rear cross member

Up to serial numbers :

404 L	4 847 242	**404 U6**	4 733 115
404 LD	4 978 354	**404 U6D**	4 906 966
		404 U6A	1 922 552

- The shock absorber lower attachment is ensured by a yoke **1.** Consequently the shock absorber and spring support incorporates an eye with silentbloc.

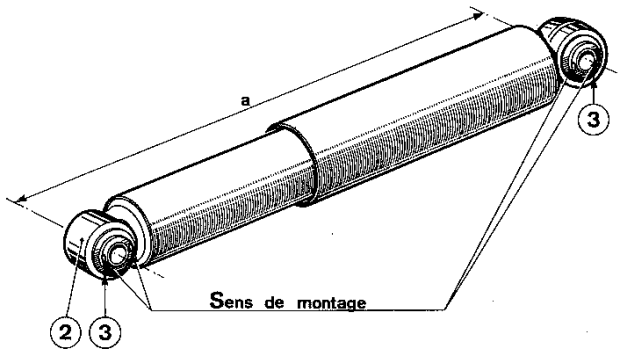

P.N. 5205.36

As from serial numbers :

404 L	4 847 243	**404 U6**	4 733 116
404 LD	4 978 355	**404 U6D**	4 906 967
		404 U6A	1 922 553

- The shock absorber lower attachment is ensured by an eye **2.** Consequently the shock absorber and spring support incorporates a yoke.
- Dimpled silentbloc **3** P.N. 5248.12 **a** (compressed shock absorber) = **312 mm** approximately.

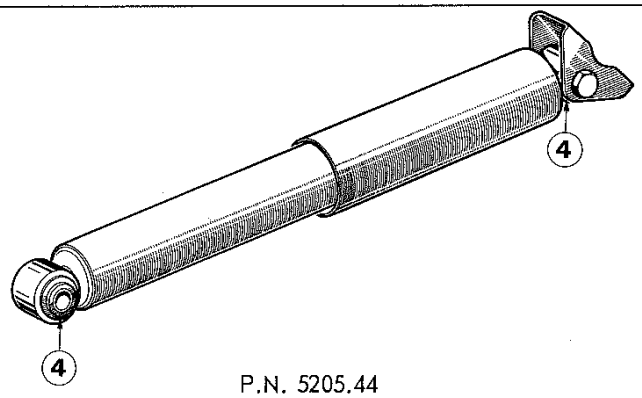

P.N. 5205.44

Family Saloon and Station Wagons with rear cross member

As from serial numbers :

404 L	4 852 164	**404 U6**	4 738 855
404 LD	4 980 059	**404 U6D**	4 908 382
		404 U6A	1 923 440

404 L Break 4 855 001 (beginning of series)

- The shock absorber only differs from the former model in that the silentblocs **4** are solid. P.N. 5248.04
- The shock absorber and spring support incorporates a yoke which is different from the former one.

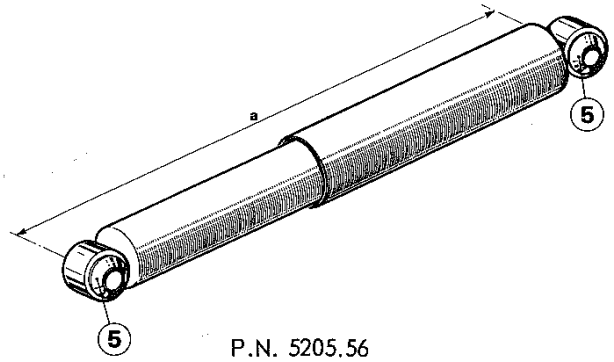

P.N. 5205.56

Light Lorries

As from serial numbers :

404 U8	7 010 001	beginning of series
404 U8D	7 040 001	
404 U10	7 060 001	
404 U10D	7 080 001	

Silentbloc **5** P.N. 5248.08

a (compressed shock absorber) = **575.5 mm** approximately.

REAR SUSPENSION

IDENTIFICATION AND CHARACTERISTICS

404 SALOONS ALL MODELS

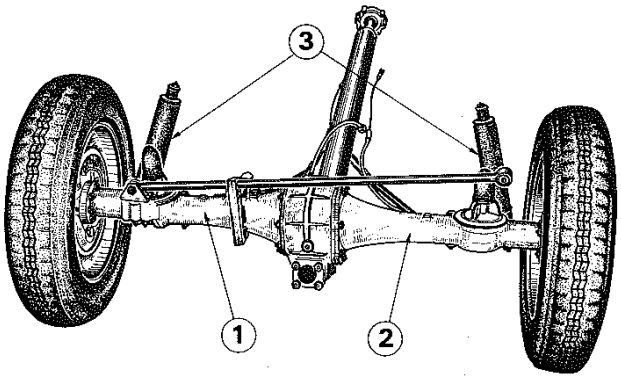

1st Fitting

Up to serial numbers :

404 (TW)	5 075 000
404 (TH)	5 311 000
404 D	4 619 852
404 KF	8 224 862
404 ZF	8 251 300

As from serial number :

404/8 6 900 001 (beginning of series)

1 - rear axle left hand tube

2 - rear axle right hand tube

3 - rear shock absorber

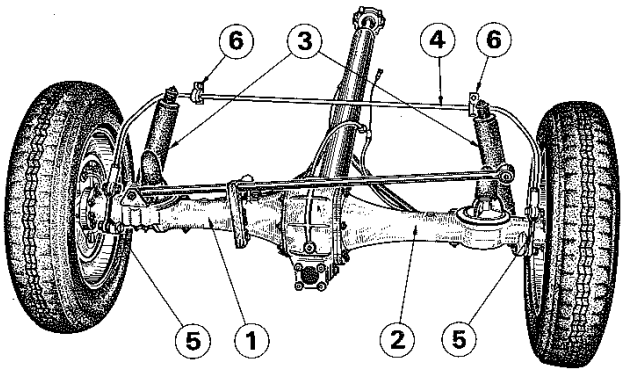

2nd Fitting

Up to serial numbers :

404 (TW)	5 075 001
404 (TH)	5 311 001
404 D	4 619 853
404 KF	8 224 863
404 ZF	8 251 301

1 - rear axle left hand tube
2 - rear axle right hand tube
3 - rear shock absorber
4 - anti-roll bar
5 - connecting link
6 - anti-roll bar bushings

NOTE *- The front anti-roll bar diameter has been increased by 3 mm (diameter 23 mm in place of 20) and the front and rear shock absorbers diagram altered.*

REAR SUSPENSION

IDENTIFICATION AND CHARACTERISTICS

404 FAMILY SALOONS AND STATION WAGONS ALL MODELS

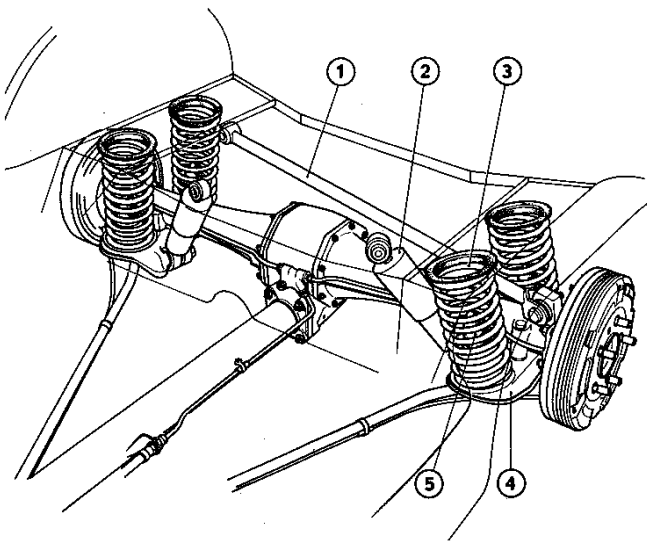

1st Fitting

Up to serial numbers :

404 L	4 852 163
404 LD	4 980 058
404 U6	4 758 854
404 U6D	4 908 381
404 U6A	1 923 439

The springs centering cups, the shock absorbers and the stabiliser bar are directly secured to the bodywork.

1 - Stabiliser bar
2 - Rear shock absorbers
3 - Rear spring
4 - Rear shock absorber and spring support
5 - Rebound block

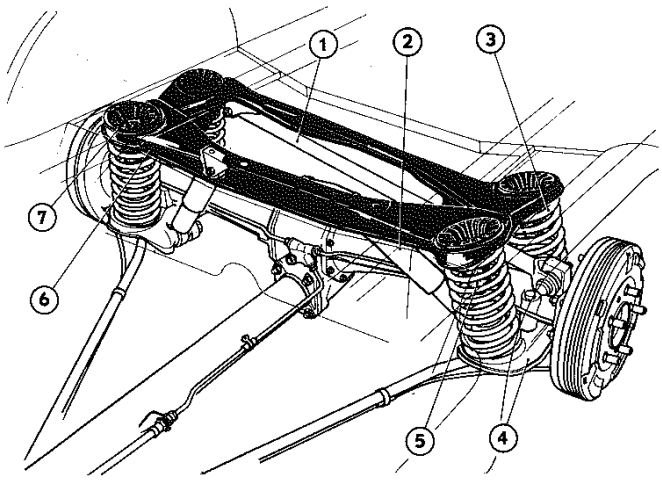

2nd Fitting

As from serial numbers :

404 L	4 852 164
404 LD	4 980 059
404 U6	4 738 855
404 U6D	4 908 382
404 L (Break)	4 855 001 (beginning of series)
404 U6A	1 923 440

Fitting of a pressed sheet metal cross member placed between the floor and the rear springs on which are secured the rear shock absorbers and the stabiliser bar.

1 - Stabiliser bar 4 mm shorter
2 - Rear shock absorber
3 - Rear spring
4 - Rear shock absorber and springs support
5 - Rebound block
6 - Rear suspension cross member
7 - Rear cross member rubber spacer

404 FAMILY SALOONS AND STATION WAGONS ALL MODELS

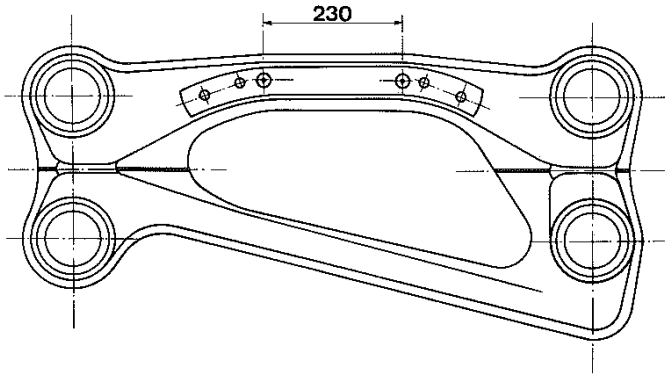

P.N. 5848.01

REAR CROSS MEMBER

1st Fitting

Up to serial numbers :

404 L	4 895 135	**404 U6**	4 767 121
404 L (Break)	4 860 740	**404 U6D**	4 909 876
404 LD	4 981 229	**404 U6A**	1 925 212

The distance between centres of the cross member corresponding shafts on the body work is of 230 mm.

- This cross member is no longer supplied by the spare parts department.

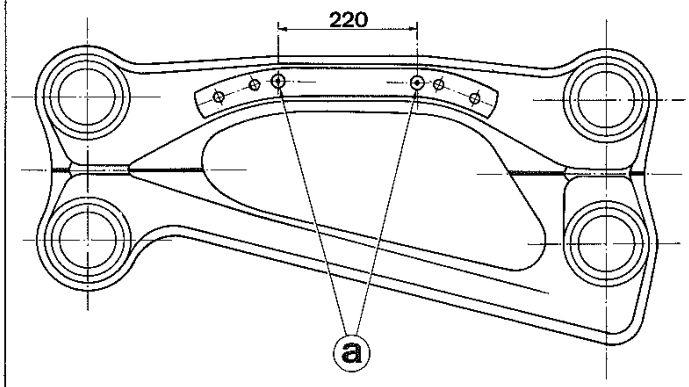

P.N. 5848.03

2nd Fitting

As from serial numbers :

404 L	4 895 136	**404 U6**	4 747 122
404 L (Break)	4 860 741	**404 U6D**	4 909 877
404 LD	4 981 230	**404 U6A**	1 925 213

The distance between centres of the cross member attachment holes and of the corresponding shafts on the body is of **220 mm.**

INTERCHANGEABILITY

Cross member replacement

on a car manufactured prior to the above mentioned serial numbers the holes at **a** should be increased to 5 mm towards the **exterior.**

Bodywork replacement

on a car manufactured prior to the above mentioned serial numbers the holes at **a** should be increased to 5 mm towards the **interior.**

SALOONS

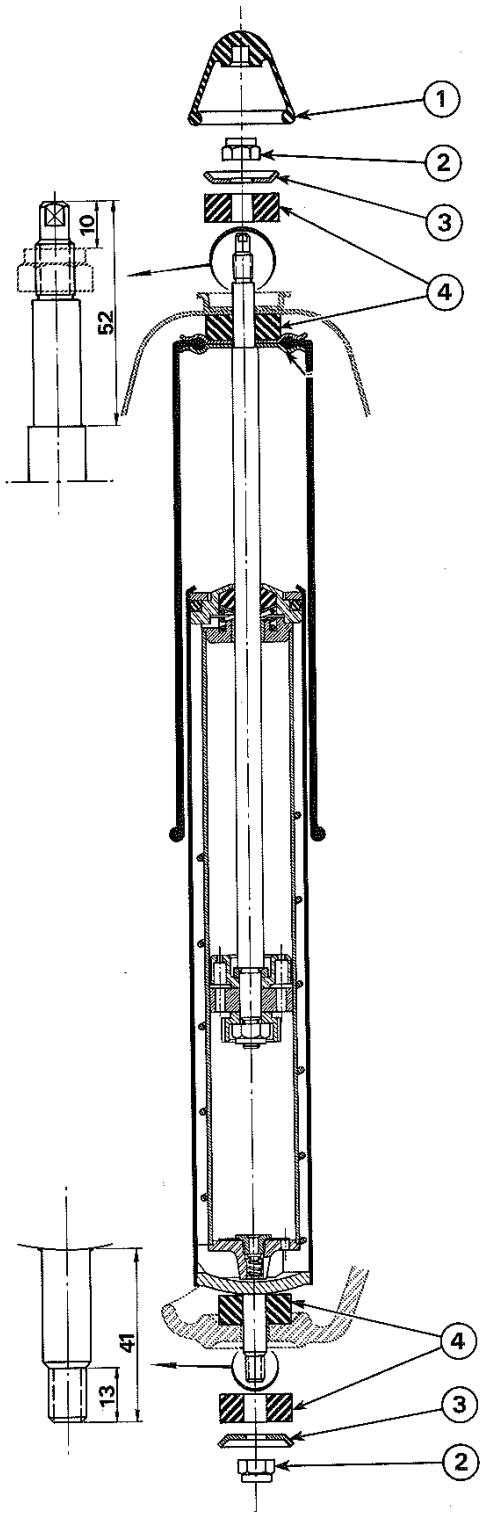

REMOVAL

On rear floor :

- Remove cap **1**
- Slacken the Nylstop nut **2** while holding the shock absorber rod by its flat part using a 5 mm wrench.
- Remove cup **3** and rubber bushing **4.**

On rear axle tube :

- Slacken Nylstop nut **2**
- Remove cup **3** and rubber bushing **4**
- Compress and remove the shock absorber.

REFITTING

- Place on both upper and bottom stems of the shock absorber a rubber bushing **4**

On rear floor :

- Hold the shock absorber in position
- Install bushing **4** and cup **3**
- Engage a **new** Nylstop nut
- Tighten the nut to **9 ft.lbs** (1.25 m.kg) holding the rod by its flat part.

On rear axle tube :

- Release the shock absorber so that the bushing comes into contact with the support
- Install bushing **4** and cup **3**
- Engage a **new** Nylstop nut
- Tighten the nut to **9 ft.lbs** (1.25 m.kg)

Checking

- At the shock absorber upper attachment the rod should protrude from the nut by 9.5 to 10 mm
- Fit cap **1.**

REAR SUSPENSION

REAR SHOCK ABSORBERS

ASSOCIATED VEHICLES

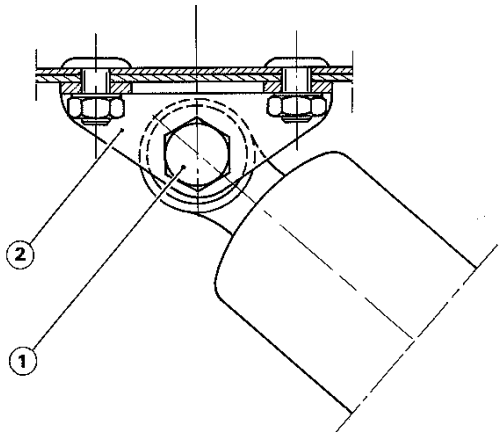

I - STATION WAGONS AND FAMILY SALOONS

REMOVAL

- Remove the shock absorber lower pivot
- Slacken the upper pivot **1** and rotate the shock absorber until it becomes perpendicular to the cross member.
- Remove the upper attachment bracket **2** from the cross member.

REFITTING

- Refitting is a reversal of the removal procedure.
- Position the shock absorber upper pivot attachment nut towards the front
- Tighten the upper attachment bracket to the cross member to **18 ft.lbs (2.5 m.kg)**
- Tighten the shock absorbers pivot attachment nuts to the torques indicated below :
  - upper nuts : **40 ft.lbs** (5.5 m.kg)
  - lower nuts : **34 ft.lbs** (4.75 m.kg)

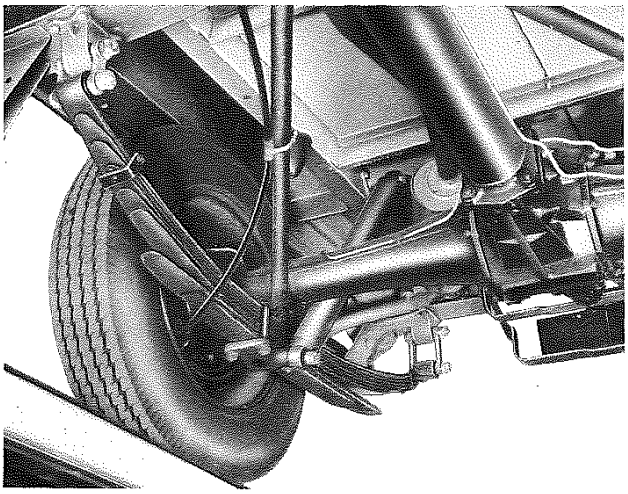

II - LIGHT LORRIES

REMOVAL

- Remove :
  - the lock-nuts and the upper and lower pivot attachment nuts
  - the thrust washer

- Remove the shock absorbers

REFITTING

- Refitting is a reversal of the removal procedure.

- Tighten the lower and upper attachment nuts to **40 ft.lbs** (5.5 m.kg)

REAR SUSPENSION

REAR CROSS MEMBER

404 FAMILY SALOONS AND STATION WAGONS

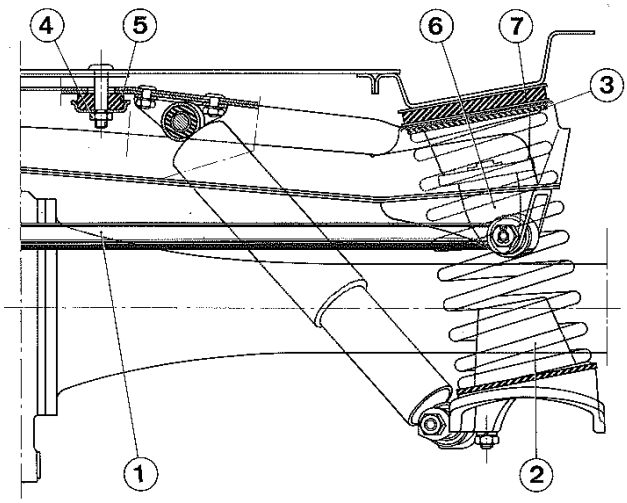

REMOVAL

- Place the car on a pit or on a car lift
- Remove the rear shock absorbers
  Disconnect :
  - the braking compensator spring from the stabilizer bar if necessary.
  - the stabilizer bar **1** from the rear axle tube and the cross member
- Raise the vehicle from the rear and remove the suspension springs **2**
- Remove the Butyl thrust stops **3** from the springs.
- Slacken the nuts from the travel limiting stops **4**
- Recover the cups and bushings **5**
- Remove the rebound blocks **6**
- Hold the cross member during this operation
- Remove the cross member
- Recover the Butyl thrust stops from the cross member **7**.

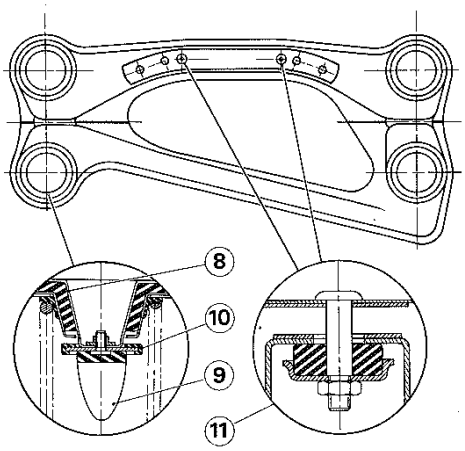

REFITTING

- Place the Butyl thrust stops on the cross member.
- Bring the cross member into position and centre it on the floor using guiding cups **8.**
- Tighten the rebound blocks **9** equipped with cross member rubber stops **10**
- Install the travel limiting stops **11.**

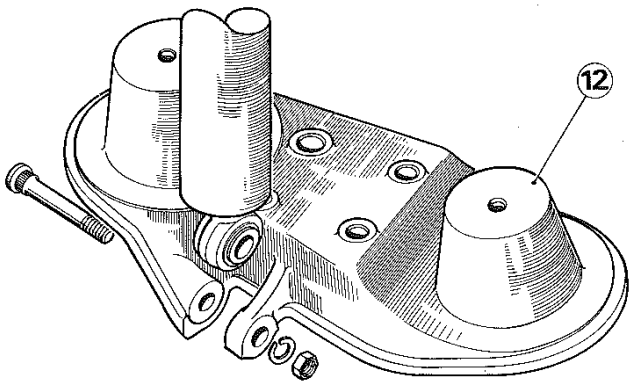

- Install the following on the shock absorber and spring supports **12** :
  - the spring lower stops
  - the springs
  - the spring upper stops
- Re-position the vehicle on its wheels with the springs centred on the cross member
- Secure the stabilizer bar onto the cross member
  - tighten the pivot nut to **43.5 ft.lbs** (6 m.kg)
  - tighten the pivot nut located on the rear axle tube to **40 ft.lbs** (5.5 m.kg)
  - pin the pivots
- Reconnect the braking compensator spring if necessary
- Refit the shock absorbers

***NOTE** : Tightening torque of the spring lower supports on the rear outer tube : **40 ft.lbs** (5.5 m.kg).*

REAR SUSPENSION

REAR CROSS MEMBER

404 FAMILY SALOONS AND STATION WAGONS ALL MODELS

INTERCHANGEABILITY

The rear suspension cross member cannot be fitted on 404 Associated Vehicles manufactured prior to the following serial numbers :

404 L	- 4 852 164	**404 U6**	- 4 738 855
404 L (Break)	- 4 855 001	**404 U6D**	- 4 908 382
404 LD	- 4 980 059	**404 U6A**	- 1 923 440

The new bodywork may be installed to replace the one of the 1st fitting on condition that the following parts are fitted :

- 1 rear suspension cross member	5148.03
- 4 cross member Butyl stops	5163.01
- 4 cross member rubber stops	5164.08
- 2 cross member retaining rings	5164.09
- 2 cross member retaining cups	5165.10
- 4 rebound blocks	5166.07
- 4 rebound block thrust stops	5164.10
- 2 shock absorber upper attachments	5267.02
- 2 shock absorber upper attachment pivots	5249.08
- 4 rear shock absorber silentblocs	5248.04
- 3 stabilizer silentblocs	5171.02
- 1 exhaust pipe	1724.22
- 1 union between the pipe and petrol tank	1564.33
or	
- 2 unions between the fuel pipe and the fuel tank	1564.34

- Replace the rear shock absorbers and the stabiliser bar dimpled silentbloc with solid silentblocs.
- Alter the petrol or diesel oil pipes.
- Tighten the rebound blocks thrust stops P.N. 5164.10 onto the former rear shock absorbers and spring supports.

***NOTE** : In the event of replacing a body shell on a Station Wagon of the 1st fitting, it is not necessary to replace the front springs.*

WHEELS AND TYRES

10

WHEELS AND TYRES

TYRE INFLATION PRESSURE TABLES

404 SALOONS-CONVERTIBLES AND COUPES

TYPE	BODY WORK	SIZE	MAKE	PRESSURE Front Psi	PRESSURE Front kg/sq.cm	PRESSURE Rear Psi	PRESSURE Rear kg/sq.cm
404 404 KF 404 KF1	Saloons	165 × 380(3) 165 × 380 X 165 × 380 SP 165 × 380 V 10 165×380 V 10.F.B.(2)	Standard all makes Michelin Dunlop Kléber-Colombes Kléber-Colombes (white walls)	21.5 20 23	1.500 1.400 1.600	25.5 23 25.5	1.800 1.600 1.800
404 KF2	Saloons	165 × 380 XA2(3) 165 × 380 GV(3) 165 × 380 XAS(1) 165×380 SP Sport(1) 165 × 380 V 10GT(1)	Michelin Kléber-Colombes Michelin Dunlop Kléber-Colombes	20.5 24 20.5 24 27	1.450 1.700 1.450 1.700 1.900	23 27 23 27 30	1.600 1.900 1.600 1.900 2.100
404 DA 404 D	Saloons	165 × 380(3) 165 × 380 X 165 × 380 SP 165 × 380 V 10	Standard all makes Michelin Dunlop Kléber-Colombes	21.5 21.5 24 24	1.500 1.500 1.700 1.700	25.5 23 25.5 25.5	1.800 1.600 1.900 1.800
404/8	Saloons	155 × 380 X 155 × 380 SP 155 × 380 V 10	Michelin Dunlop Kléber-Colombes	23 24	1.600 1.700	25.5 27	1.800 1.900
404 C	Coupés and Convertibles	165 × 380 X 165 × 380 SP 165 × 380 V 10 165×380 V 10 F.B(2)	Michelin 20 Dunlop Kléber-Colombes Kléber-Colombes(white walls)	20 23	1.400 1.600	23 25.5	1.600 1.800
404 C.KF	Coupés and Convertibles	165 × 380 XA2(3) 165 × 380 XAS(1) 165×380 SP Sport(1) 165 × 380 GV(3)	Michelin Michelin Dunlop	20.5 24	1.450 1.700	22 25.5	1.550 1.800

(1) Special «high speed» tyres. The 404's with KF2 engine must be equipped exclusively with this type of tyre which can also be fitted, as an optional extra, on 404 Saloons with carburettor or Diesel engines and on 404 Convertibles and Coupés with carburettor.
(2) These tyres may be fitted as an optional extra.
(3) These tyres are no longer fitted in the mass production
- The tyre inflation pressures indicated above **must be checked on COLD tyres.**

WHEELS AND TYRES

TYRE INFLATION PRESSURE TABLES

404 ASSOCIATED VEHICLES ALL MODELS

TYPE	BODY WORK	SIZE	MAKE	PRESSURE Front Psi	PRESSURE Front kg/sq.cm	PRESSURE Rear Psi	PRESSURE Rear kg/sq.cm
404 L	Family Cars	165 × 380 X	Michelin	20	1.400	31	2.200
		185 × 380 X (1)	Michelin	25.5	1.800	31	2.400
		185 × 380 V10 (1)	Kléber-Colombes	23	1.600	31	2.400
404 LD		165 × 380 X	Michelin	21.5	1.500	31	2.200
		185 × 380 X (1)	Michelin	25.5	1.800	31	2.400
		175 × 380 V10 (2)	Kléber-Colombes	24	1.700	40	2.800
		185 × 380 V10 (1)	Kléber-Colombes	23	1.600	31	2.400
404 L Break		165 × 380 (1)	Reinforced all makes	23	1.600	35.5	2.500
		165 × 380 X	Michelin	20	1.400	31	2.200
		165 × 380 V10	Kléber-Colombes	23	1.600	36	2.500
		165×380 V10F.B. (1)	Kléber-Colombes (white walls)				
		185 × 380 X (1)	Michelin	25.5	1.800	37	2.600
		175 × 380 V10 (2)	Kléber-Colombes	24	1.700	40	2.800
		185 × 380 V10 (1)	Kléber-Colombes	23	1.600	40	2.800
404 U6	Station Wagons	165 × 380	Reinforced all makes	23	1.600	35.5	2.500
		165 × 380 X (1)	Michelin	20	1.400	31	2.200
		165 × 380 V10 (1)	Kléber-Colombes	23	1.600	35.5	2.500
		185 × 380 X (1)	Michelin	25.5	1.800	37	2.600
		175 × 380 V10 (2)	Kléber-Colombes	24	1.700	40	2.800
		185 × 380 V10 (1)	Kléber-Colombes	23	1.600	40	2.800
404 U6D		165 × 380	Reinforced all makes	24	1.700	25.5	2.500
		165 × 380 X (1)	Michelin	21,5	1.500	31	2.200
		185 × 380 X (1)	Michelin	23	1.600	32.5	2.300
		175 × 380 V10 (2)	Kléber-Colombes	25.5	1.800		2.800
		185 × 380 V10 (1)	Kléber-Colombes	23	1.600		2.800
404 U6 USA		165 × 380	Reinforced all makes	23	1.600	36	2.500
		165 × 380 X	Michelin	20	1.400	31	2.200
		165×380 V10 F.B.(1)	Kléber-Colombes	23	1.600	35.5	2.500
		185 × 380 (1)	Michelin	25.5	1.800	37	2.600
		175 × 380 V10 (2)	Kléber-Colombes	24	1.700	40	2.800
		185 × 380 V10 (1)	Kléber-Colombes	23	1.600	40	2.800
404 U8D	Light Lorries	17 × 380 X	Michelin	23	1.600	52.5	3.700
		17 × 380 SP	Dunlop	25.5	1.800	54	3.800
		17 × 380 V10	Kléber-Colombes	28.5	2	54	3.800
404 U8D		17 × 380 X	Michelin	24	1.700	52.5	3.700
		17 × 380 SP	Dunlop	27	1.900	54	3.800
		17 × 380 V10	Kléber-Colombes	30	2.100	54	3.800
404 U10		17 × 380 X	Michelin	23	1.600	60	4.200
		17 × 380 SP	Dunlop	25.5	1.800	60	4.200
404 U10D		17 × 380 X	Michelin	24	1.700	60	4.200
		17 × 380 SP	Dunlop			60	4.200

(1) • These tyres may be fitted as an optional extra
(2) • These tyres are no longer fitted in the mass production
The tyre inflation pressures indicated above **must be checked on COLD tyres**

RECOMMENDED TOOLS

Description	Supplier
- Wheel balancer for balancing the wheels off the car	- Weaver WS 41 - Muller BEM 2600
- Wheel balancer for balancing the wheels on the car	- Alémite 7 055B/C - Alémite 7 057/58 - Marpa Stabelec - Muller BEM 2609

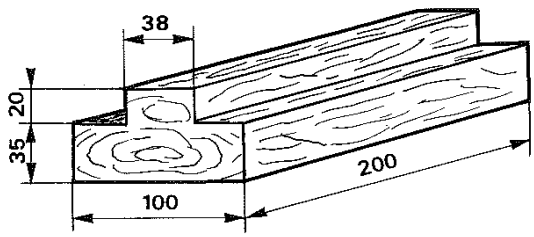

Tool to be made in the workshop

0.1001

- Front cross member lifting block

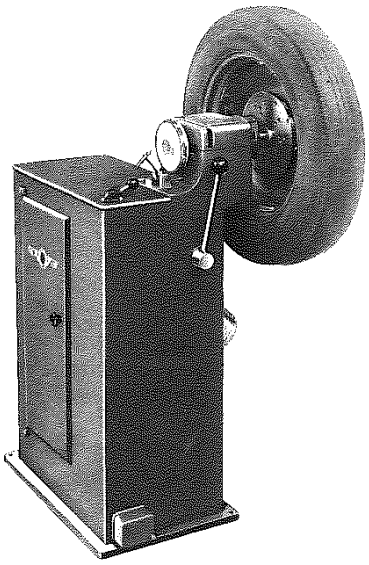

WHEEL REMOVED

Stationary wheel balancer

Precautions to be taken

- Clean the inner and outer part of the wheel
- Remove all gravel trapped in the tyre tread.
- Remove all the balance weights
- Tighten the wheel to the recommended torque of the wheel balance plate.
- Check the out of true of the wheel (2 mm tolerance is allowed)
- Check the tyre concentricity on the wheel rim.

In the event of the tyre being cut or the out of true found to be excessive (on 180° only) the tyre should be replaced.

If an out of true is apparent on the tyre tread the tyre should be rotated half a turn on the wheel rim to avoid permanent reactions.

- balancing procedures vary from one wheel balancer to au other. Consequently, it is recommended to adhere to the instructions given by the manufacturer.

WHEELS AND TYRES

WHEEL BALANCING

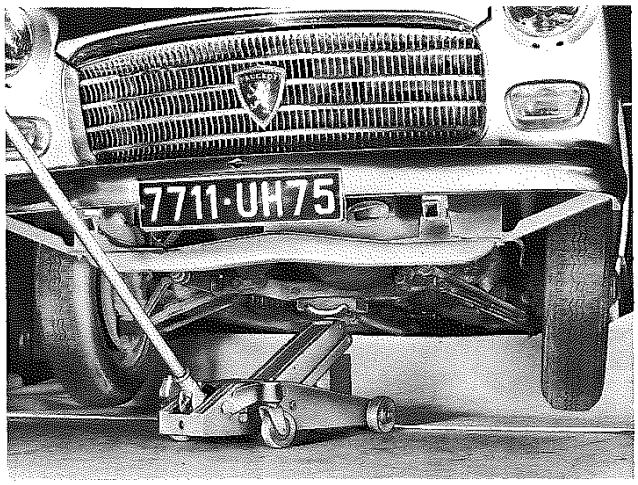

FRONT WHEEL FITTED ON THE CAR

Electronic wheel balancer

- Only the front wheel should be balanced with the electronic wheel balancer. Balancing of the rear wheels with the electronic wheel balancer is not advisable as there is a risk of seizure of the differential.

- **Precautions to be taken**

In addition to the precautions already indicated, attention should be paid to the following :

- eliminate the wheel bearings play if any
- ensure that the brake linings are correctly adjusted (the brakes should not drag)
- check the front axle flexible bushings for condition
- apply the hand brake
- properly close the doors, the bonnet and the boot lid.

- Place the wooden block **0.1001** between the jack and the cross member.
- Raise the car so that the wheels are at 10 cm from the ground.
- Maintain the jack in place under the cross member and hold it in position using a wooden block between the plate and the ground or chock under the bodywork front cross member.

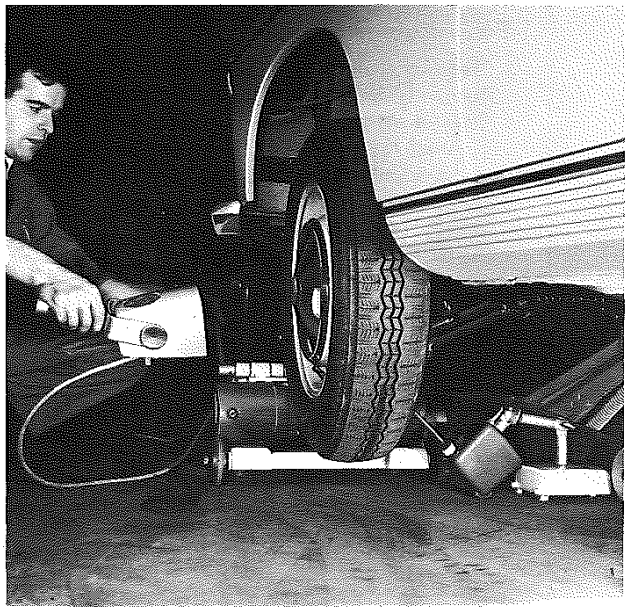

This apparatus enables accurate balancing of the wheel, the hub, the drum and hub cap.

It is recommended to follow the procedure laid down by the manufacturer, however, and this is applicable for all the electronic wheel balancers, it is preferable to proceed as follows :

1 - Carry out one single static and dynamic wheel balancing operation by positioning the pick-up arm at 45°.

2 - Depending on the amount of out of balance found :
- less than 40 g at the wheel rim, place the balance weight on the outer side.
- if the balance weight to be installed exceeds the above value, the weights should be placed both on the inner and outer part of the wheel rim.

NOTE *- Balance weights with removable springs should be used exclusively when balancing rolled flange wheels as fitted on 404 Associated Vehicles.*

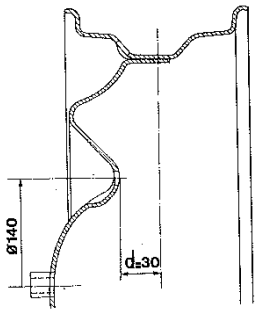

CHARACTERISTICS

404 Saloons, Convertibles and Coupés

Tyre	: Wheel rim $4\frac{1}{2}$ J.15
Number of holes	: 3
Diameter of holes	: 160 mm
Dish d	: 30 mm
Maximum warping	: 2 mm
Maximum out of true	: 2 mm

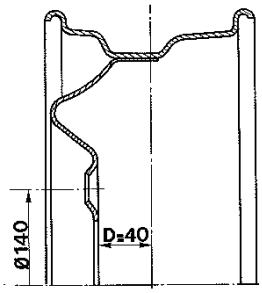

404 Associated Vehicles

Tyre	: Wheel rim 5 J.15
Number of holes	: 5
Diameter of holes	: 140 mm
Dish d	: 40 mm
Maximum warping	: 2 mm
Maximum out of true	: 2 mm

WHEELS AND TYRES

WHEELS

I - SALOONS - CONVERTIBLES - COUPES 404 - WITH TWINPLEX BRAKES
MICHELIN WHEELS

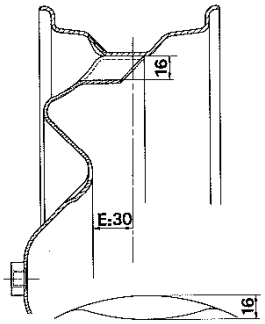

P.N. 5403.21*

1st Fitting

Wheel : $4\frac{1}{2}$ J.15 - 3.30 E

- With 16 mm chain passage
- With welded hub cap attachment nut

INTERCHANGEABILITY

- This wheel cannot be fitted on a 280 mm drum.

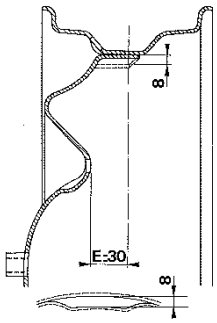

P.N. 5403.23*

2nd Fitting

As from April 1962

Wheel : $4\frac{1}{2}$ J.15 3.30.E

- With 8 mm chain passage
- With nut cage for hub cap attachment
- Maximum tightening torque of hub cap attachment bolt **22 ft.lbs** (3 m.kg)

INTERCHANGEABILITY

- This wheel may be installed to replace the wheels of the 1st and 3rd fittings.

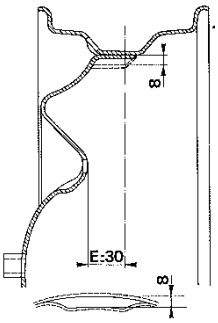

P.N. 5403.27

3rd Fitting

As from May 1963

Wheel : $4\frac{1}{2}$ J.15 - AL 3.30.E

- Lightened wheel
- With 8 mm chain passage

INTERCHANGEABILITY

- This wheel may be fitted to replace the wheels of the 1st, and 2nd fittings.

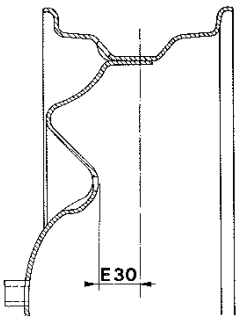

P.N. 5403.32

4th Fitting

As from March 1965

Wheel : $4\frac{1}{2}$ J.15 AL-BM 3.30P

- Without chain passage

INTERCHANGEABILITY

- This wheel may be used to replace one of the 1st, 2nd and 3rd fittings.

* These wheels are no longer supplied by the Spare Parts Department

II - SALOONS - CONVERTIBLES - COUPES 404 - Thermostable Brakes.
404/8 SALOONS - Disc Brakes

MICHELIN WHEELS

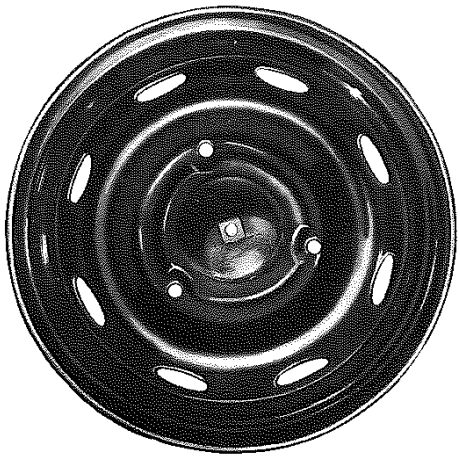

P.N. 5403.29

Wheels : $4\frac{1}{2}$ J.15 - AL.BM3.30V

- Without chain passage
- Perforated disc type wheel

INTERCHANGEABILITY

- On cars equipped with Twinplex brakes these wheels may be fitted to replace wheels of the 1st, 2nd, 3rd and 4th fittings.

- Perforated wheels **must** exclusively be installed on cars equipped with Thermostable brakes to ensure proper cooling of either the brake drums or the discs.

WHEELS AND TYRES

WHEELS

404 SALOONS - CONVERTIBLES - COUPES.
DUNLOP WHEELS,

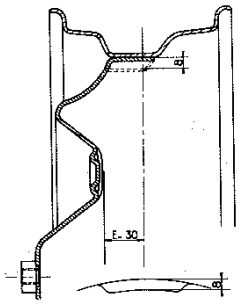

P.N. 5403.22*

1st Fitting

Wheel : $4\frac{1}{2}$ J.15 - 3.30

- With 8 mm wheel passage.
- With welded hub cap attachment nut.
- With rim attachment ensured by a Dunlop nut.

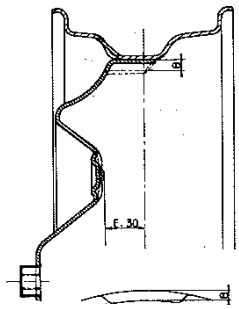

P.N. 5403.24

2nd Fitting

As from May 1962

Wheel : $4\frac{1}{2}$ J.15 - 3.30

- With 8 mm chain passage
- With hub cap attachment nut in nut cage
- Maximum tightening torque of the hub cap nut **22 ft.lbs** (3 m.kg)
- Wheel rim attachment ensured by a Dunlop nut.

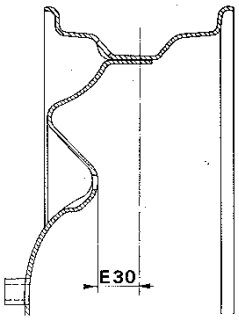

P.N. 5403.32

3rd Fitting

As from February 1965

Wheel : $4\frac{1}{2}$ J.15 - 3NS30

- Without chain passage
- Wheel rim attachment ensured by a nut with thrust plate.

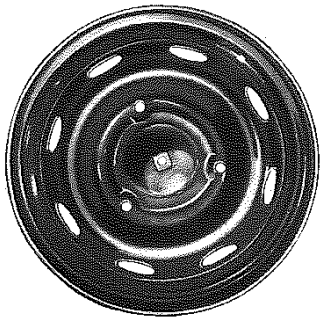

P.N. 5403.29

Cars equipped with Thermostable brakes

Wheel : $4\frac{1}{2}$ J.15 3 NS 30

- Perforated wheel disc
- Without chain passage
- Wheel rim attachment ensured by a nut with thrust plate.

INTERCHANGEABILITY

- The conditions are identical to those applicable for the Michelin wheel of which the spare part number remains unchanged
- It is possible to fit Michelin and Dunlop wheels on the same car.

* This type of wheel is no longer supplied by the Spare Parts Department.

404 ASSOCIATED VEHICLES
MICHELIN WHEELS

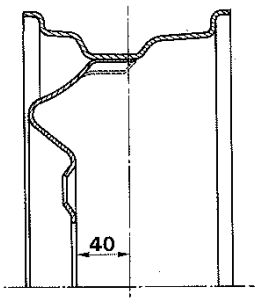

P.N. 5403.16

1st Fitting

Wheel : 5 J.15 5.40

- With flat edges
- With chain passage

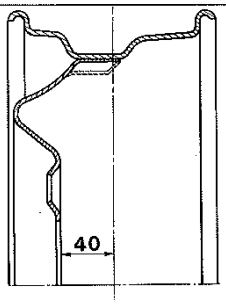

P.N. 5403.16

2nd Fitting

As from October 1962

Wheel : 5 J.15 - A5.40

- With rolled edges
- With chain passage

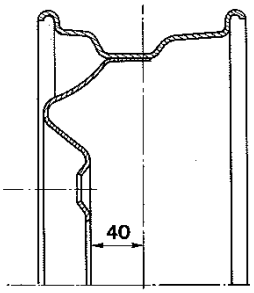

P.N. 5403.37

3rd Fitting

As from March 1966

- With rolled edges
- Without chain passage

INTERCHANGEABILITY

- The wheels of the 1st, 2nd and 3rd fittings are interchangeable.

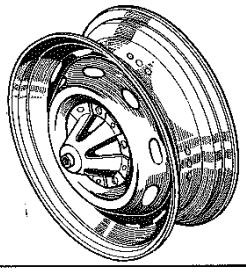

P.N. 5403.30

Cars equipped with Thermostable brakes

1st Fitting

Wheel : 5 J.15 - A5.40V

- With perforated disc
- With chain passage

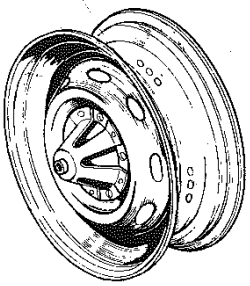

P.N. 5403.36

2nd Fitting

As from April 1966

Wheel : 5 J.15 - A5.40PV

- With perforated disc
- Without chain passage

INTERCHANGEABILITY

- The wheels with perforated discs may be used to replace those of the 1st, 2nd and 3rd fittings with solid discs.
- Perforated disc wheels must only be used on cars equipped with Thermostable brakes to ensure proper cooling of the brake drums.

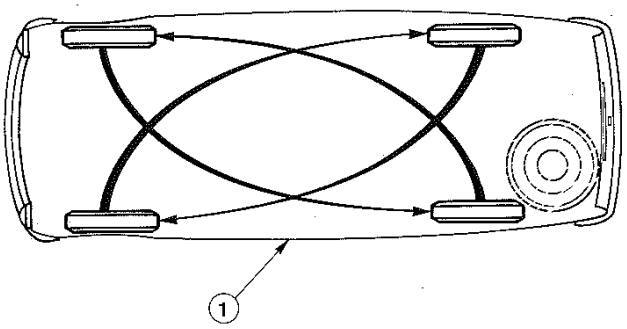

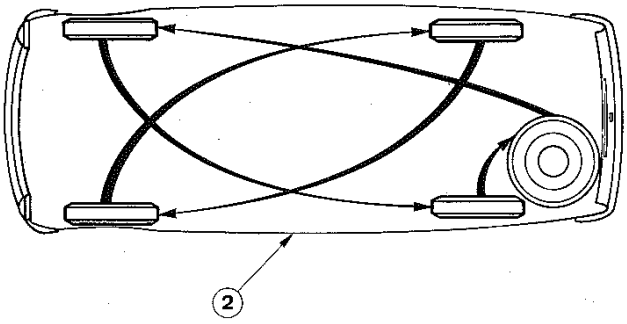

INTERCHANGING WHEEL POSITIONS

- Interchanging wheel positions at 6.000 miles (10.000 km) may be carried out in two different ways.

1 - With the four wheels
2 - With the four wheels and the spare wheel

- After interchanging the wheel position the tyres should be inflated to the correct pressure and the front wheels balanced.

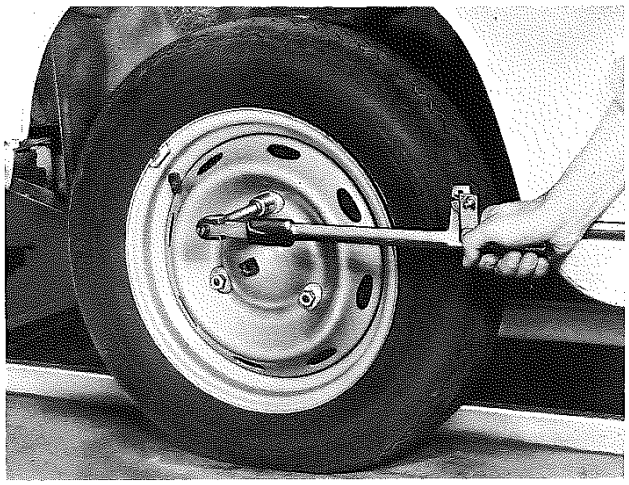

WHEEL TIGHTENING

Wheel tightening must be carried out using a torque wrench

Tightening torque

404 Saloons 404 Coupés 404 Convertibles	**43.5 ft.lbs** (6 m.kg)
404 Associated Vehicles	: **58 ft.lbs** (8 m.kg)

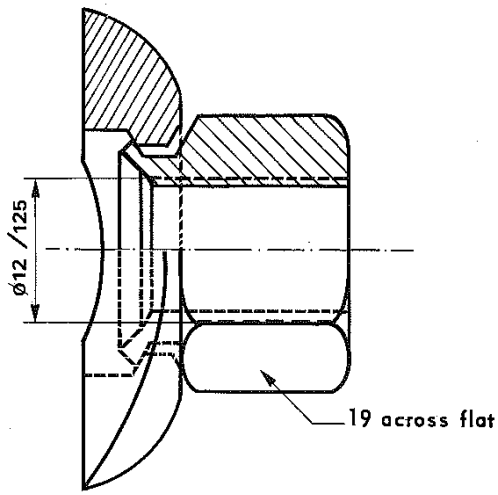

WHEEL ATTACHMENT

1 - 404 Saloons, Convertibles and Coupés

Michelin tyre

Tightening torque : 43.5 ft.lbs (6 m.kg)

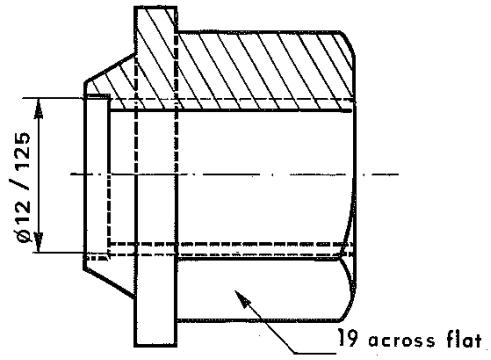

Dunlop Tyre

- Attachment standardized with that of the Michelin wheel since February 1965.

Tightening torque : 43.5 ft.lbs (6 m.kg)

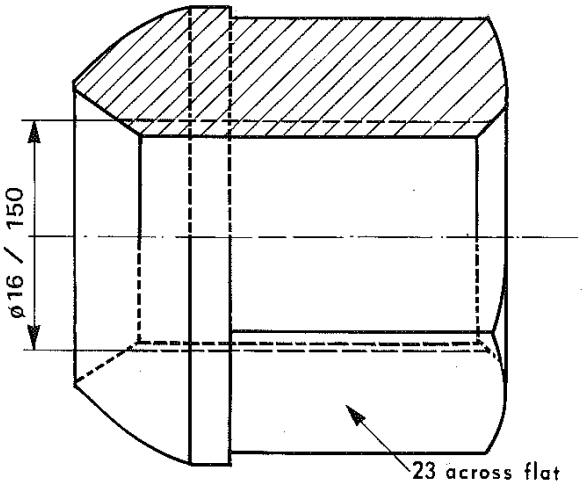

2 - 404 Associated Vehicles

Michelin tyre

Tightening torque : 58 ft.lbs (8 m.kg)

WHEELS AND TYRES

HUB CAPS

«Grand Tourisme» SALOONS AND FAMILY CARS

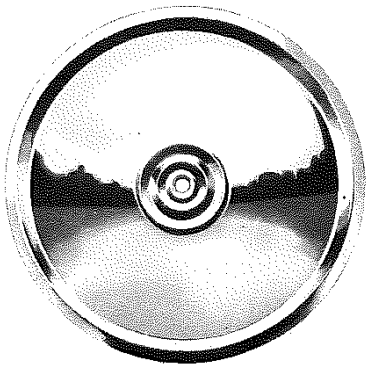

Up to July 1964

- Hub cap P.N. 5415.09

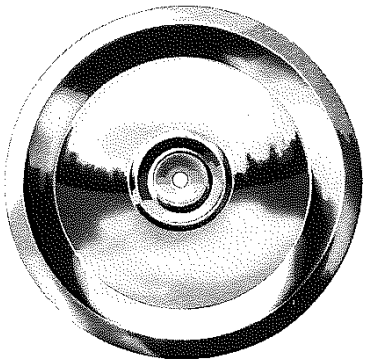

As from September 1964

- Hub cap P.N. 5415.15 of a smaller diameter

404/8 STATION WAGONS AND SALOONS

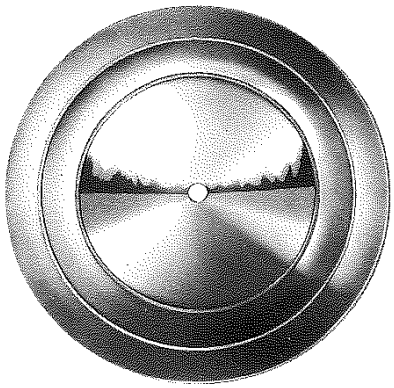

Since the beginning of the series

- Hub cap P.N. 5415.06

WHEELS AND TYRES

HUB CAPS

404 «Super Luxe» SALOONS - CONVERTIBLES - COUPES
404 USA SALOONS AND STATION WAGONS - 404 BREAKS

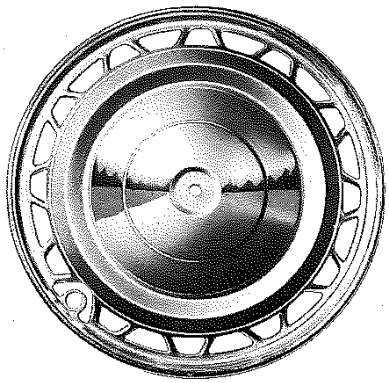

Up to July 1963

- Hub cap P.N. 5415.11

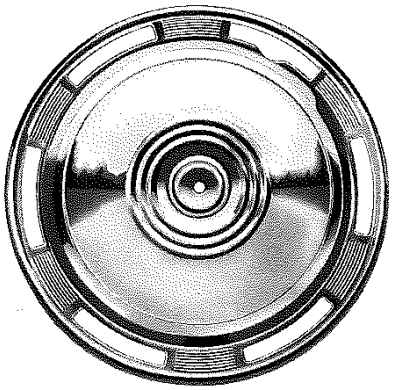

From September 1963 to July 1964

- Hub cap P.N. 5415.14 incorporating six holes.

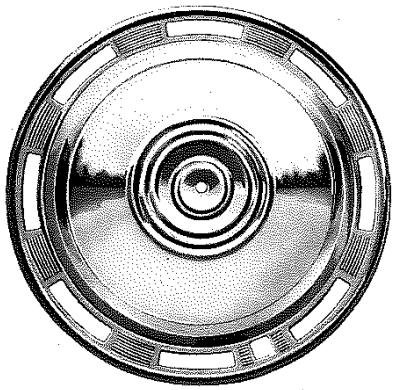

Since September 1964

- Hub cap P.N. 5415.17 incorporating eight holes.

HULL AND BODY BENCH

11

Page

IDENTIFICATION OF THE HULL

BODY BENCH

HULL ON THE BODY BENCH

IDENTIFICATION

HULLS

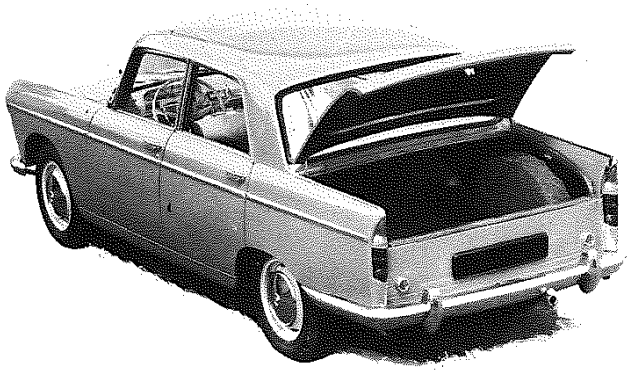

404 SALOONS

1st Fitting

Up to serial numbers :

404	-	4 399 083
404 J	-	4 527 033
404 KF	-	4 556 165
404 DA	-	3 060 632

Hull with normal passenger space and spare wheel in the boot.

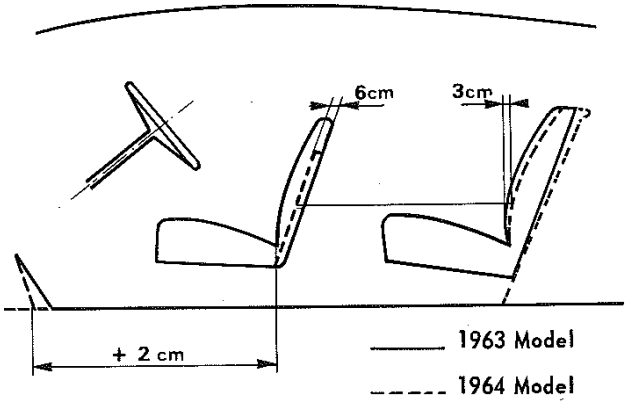

2nd Fitting

As from numbers :

404	-	4 399 084	
404 J	-	4 527 034	
404 KF	-	4 556 166	
404 DA	-	3 060 633	
404 D	-	4 600 001	beginning of series
404 ZF	-	8 250 001	beginning of series
404 A8	-	1 910 001	beginning of series

Hull with increased passenger space and spare wheel in the boot.

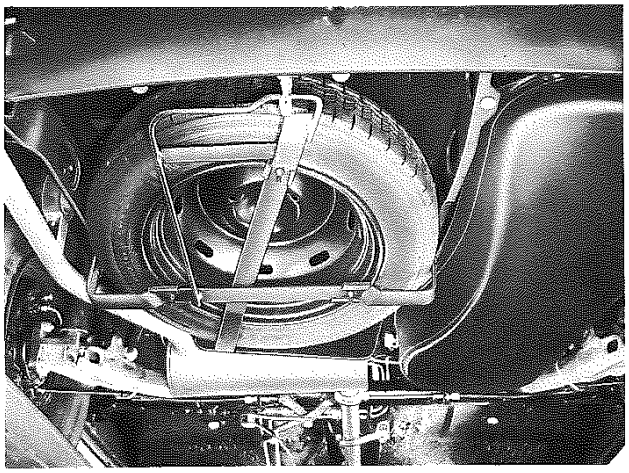

3rd Fitting

As from numbers :

404 (TW)	-	5 075 001	
404 (TH)	-	5 311 001	
404 KF	-	8 224 863	
404 D	-	4 619 853	
404 ZF	-	8 251 301	
404 A8	-	1 910 358	
404/8	-	6 900 001	beginning of series

Hull with increased passenger space and spare wheel under the luggage boot.

404 SALOONS

INTERCHANGEABILITY

The Spare Parts Department now only deliver the 3rd fitting hull; consequently, when replacing the 2nd fitting hull with a new one, it is necessary to replace the following parts :

- Spare wheel carrier
- Spare wheel carrier lock
- Lock mounting counter plate
- Lock spring
- Plastic lock control
- Plastic lock control rubber seal
- Fuel tank
- Fuel tank rear mounting plate
- Fuel filler tube fitting
- Fuel filler tube connection
- Fuel filler tube rubber seal
- Plastic tube protector
- Fuel gauge unit
- Fuel gauge unit protector
- Fuel inlet rubber union
- Fuel lines
- Luggage boot catch
- Rear bumper blades : left and right hand
- Left hand rear bumper support
- Right hand rear bumper support
- Rear bumper left hand mounting gusset
- Rear bumper right hand mounting gusset
- Rubber seal between bumper and bumper seat
- The over-riders
- Over-rider securing bolts
- Registration plate hinge support
- Rear bumper seat trim
- Lower rear light rubber seal
- Rear light rubber seal
- Left hand reflector
- Right hand reflector

In the event of replacement of a 1st fitting hull with a new one, the following parts must also be replaced :

- Steering column cover seal plate
- Steering column cover seal
- Clutch pedal
- Brake pedal
- Accelerator pedal
- Accelerator outer cable
- Accelerator cable rubber stop
- Pedal support housing
- Pedal support housing rubber seal
- Gear change counter lever
- Counter arm grease nipple

For vehicles prior to number :
404 - 4 383 925
404 KF - 4 555 262

The rear back rest and arm rest should also be adapted to the new hull, as shown on the following page.

404 SALOONS

METHOD OF ADAPTING THE REAR BACK REST AND ARM REST OF THE 1st FITTING TO A HULL PRODUCED AFTER JULY 1963

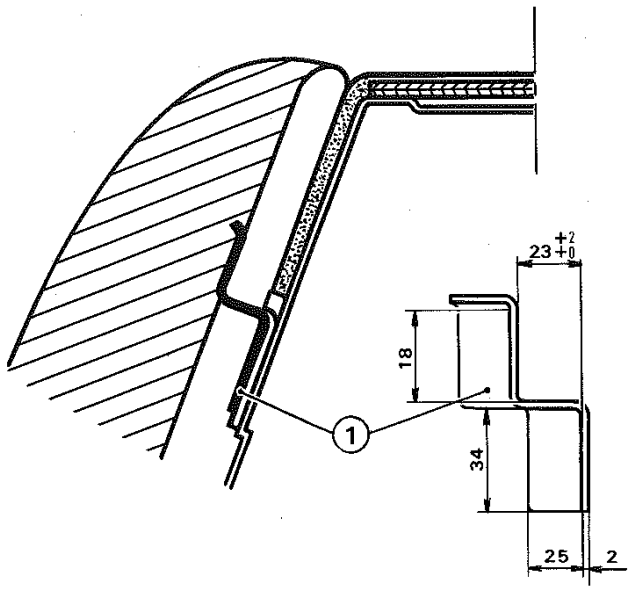

- Recover the two upper back rest retaining lugs **1** from the old hull, or make them up from 20/10 sheet metal according to the diagram opposite.
- Remove the lugs from the new hull.
- Weld the retaining lugs **1** in their place.

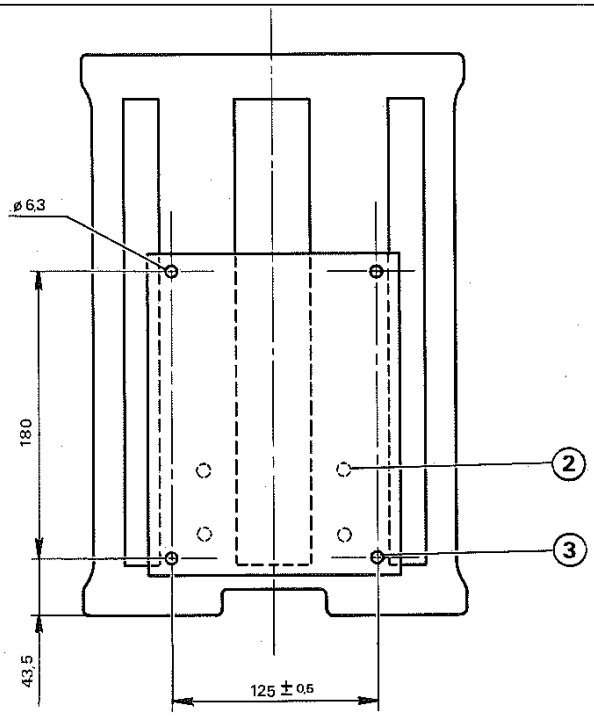

- Remove the four screws **2** from the arm-rest support in the new hull.
- Drill four holes of 6.3 mm diameter in the central arm rest support plate, as shown opposite.
- Recover the arm-rest from the old hull and secure it in the new one.
- Fit the rear seat back rest.

IDENTIFICATION

HULLS

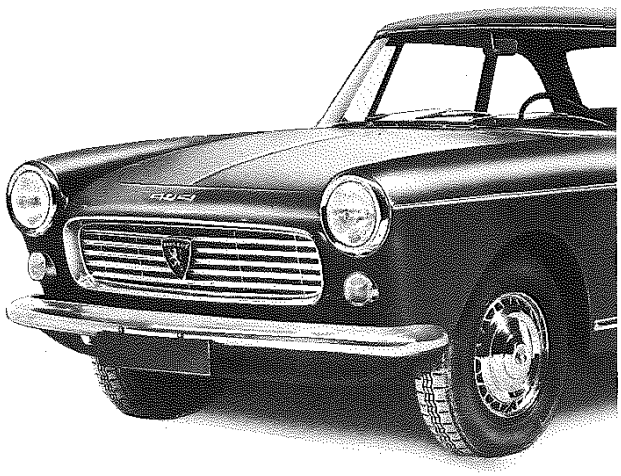

CONVERTIBLES AND COUPES

1st Fitting

Up to numbers :

404 C - 4 497 121
404 C.KF - 4 592 234

- Hull with front block designed for normal passenger space.
- Grille opening, normal.

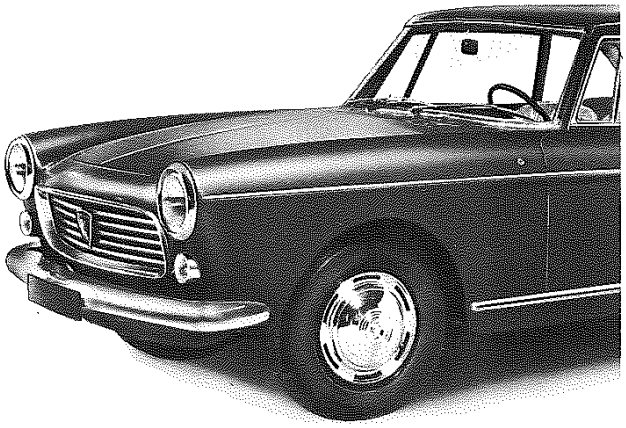

2nd Fitting

As from numbers :

404 C - 4 497 122
404 C.KF - 4 592 235

- Hull with front block designed for increased passenger space.
- Grille opening, normal.

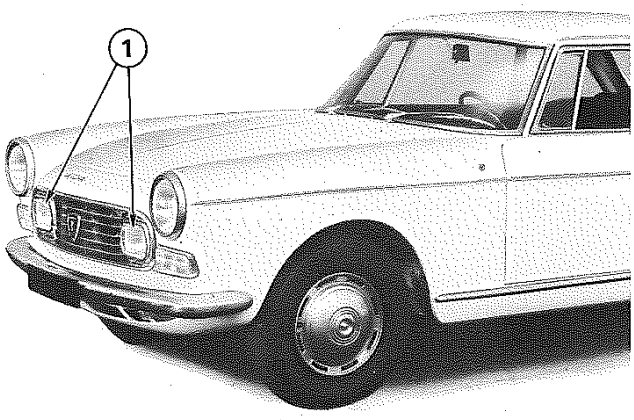

3rd Fitting

As from numbers :

404 C - 4 499 501
404 C.KF - 4 599 272

- Hull with front block designed for increased passenger space.
- Grille opening enlarged, to enable the fitting of two supplementary iodine lamps **1**.

404 CONVERTIBLES AND COUPES

INTERCHANGEABILITY

1. - The Spare Parts Department no longer deliver the 1st fitting hull; consequently, in the event of replacement of the hull, with one of the 2nd fitting the following parts must be changed :

- Pedal support housing and seal
- Clutch pedal
- Brake pedal
- Accelerator pedal
- Accelerator outer cable
- Accelerator cable rubber stop
- Steering column cover seal securing plate
- Steering column cover
- Gear change counter lever
- Gear change counter lever grease nipple

For 404 C manufactured prior to numbers :
404 C - 4 496 182
404 C.KF - 4 591 701

2. - The hulls of the 2nd and 3rd fittings are interchangeable, provided the following parts are fitted or replaced :

- Grille and badge
- Front bumper
- Iodine main beam headlamps
- Front side lights
- Front mud shield

NOTE *- In order to compensate the difference in consumption between the standard and iodine headlamps, it is necessary to adapt an alternator in place of the dynamo.*

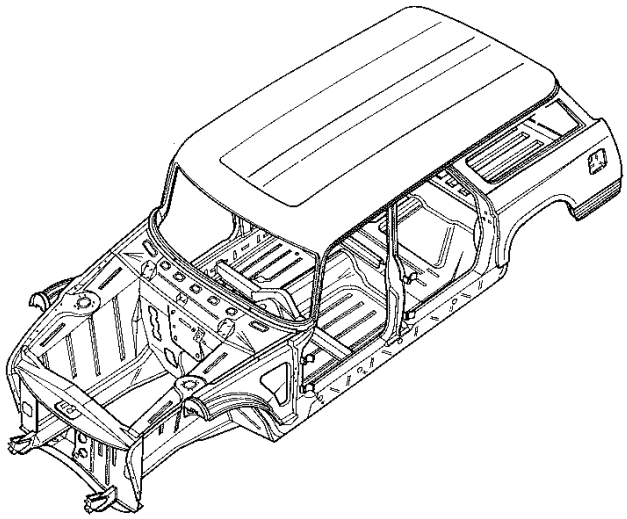

404 FAMILY CARS AND STATION WAGONS

1st Fitting

Up to numbers :

404 L - 4 838 006 **404 U6** - 4 720 034
404 LD - 4 977 068 **404 U6D** - 4 904 201

- Hull with front block designed for normal passenger space, with worm and wheel final drive but without rear suspension cross member.

2nd Fitting

As from numbers :

404 L - 4 838 007 **404 U6** - 4 720 035
404 LD - 4 977 069 **404 U6D** - 4 904 202

- Hull with front block designed for increased passenger space, with worm and wheel final drive but without rear suspension cross member.

3rd Fitting

As from numbers :

404 L - 4 852 164 **404 U6D** - 4 908 382
404 LD - 4 980 059 **404 U6A** - 1 923 440
404 U6 - 4 738 855 **404 L(BK)** - 4 855 001

- Hull with front block designed for increased passenger space, with worm and wheel final drive and rear suspension cross member.

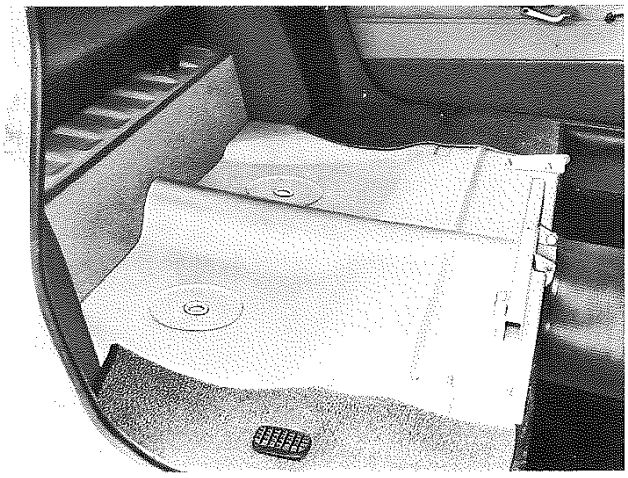

4th Fitting

As from numbers :

404 L(TW) - 4 898 401 **404 U6** - 4 761 301
404 L(TH) - 4 879 401 **404 U6D** - 4 914 201
404 LD - 4 983 801 **404 U6A** - 1 927 901

- Hull with front block designed for increased passenger space, with hypoid final drive and rear suspension cross member.

404 FAMILY CARS AND STATION WAGONS

INTERCHANGEABILITY

Worm and wheel final drive

a - The Spare Parts Department now only deliver hulls of the 3rd fitting for vehicles with a worm and wheel drive; consequently when replacing a hull of the 2nd fitting with a new one, the following parts must be fitted :

- 1 rear suspension cross member
- 4 cross member blocks
- 4 cross member thrust stops
- 2 cross member retaining rings
- 2 cross member retaining cups
- 4 rebound blocks
- 4 rebound block stops
- 2 upper rear shock absorber mountings
- 2 upper shock absorber pivots
- 4 rear shock absorber silentblocs
- 2 stabiliser bar silentblocs
- Unions between the fuel lines and tank

- Replace the dimpled silentblocs of the rear shock absorbers and the stabiliser bar with solid ones.
- Modify the fuel lines.
- Screw the rebound buffer stops onto the old spring and rear shock absorber supports.

b - In the event of replacement of the 1st fitting hull with a new one the following parts must also be replaced :

- Steering column cover, seal mounting plate
- Steering column cover seal
- Clutch pedal
- Brake pedal
- Accelerator pedal
- Accelerator outer cable
- Accelerator cable rubber stop
- Pedal support housing
- Pedal support housing rubber seal
- Gear change counter lever
- Gear change counter lever grease nipple

For Associated vehicles manufactured prior to numbers :
404 L - 4 836 026 **404 U6** - 4 718 016
404 LD - 4 976 871 **404 U6D** - 4 903 753

On 404 Family Cars manufactured prior to numbers : **404 L** - 4 836 398 and **404 LD** - 4 976 918, the central bench seat should also be adapted to the new hull according to the method shown on the following page.

Hypoid final drive

The Spare Parts Department deliver the hulls for vehicles with a hypoid rear axle : these are not interchangeable with those for vehicles equipped with a worm and wheel final drive.

404 FAMILY CARS

METHOD OF ADAPTING THE CENTRE BENCH SEAT ON A HULL PRODUCED AFTER JULY 1963

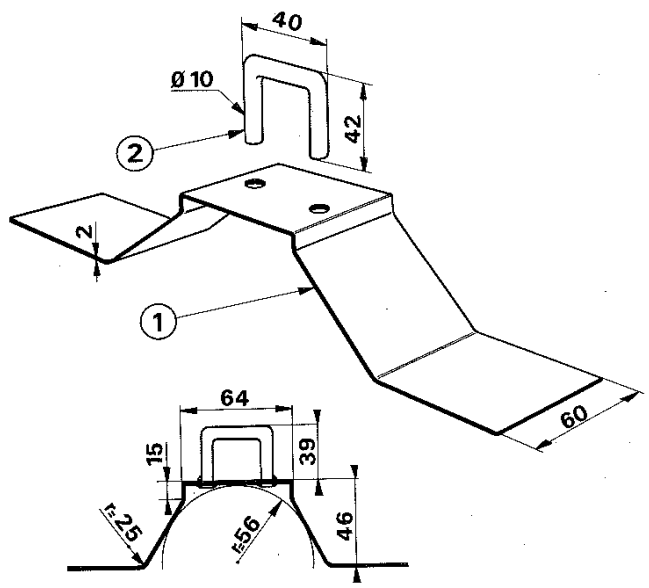

- Make up a locking catch support **1** in 20/10 mm sheet metal, as shown opposite.

- Recover the catch **2** from the old hull and weld it to the support **1**.

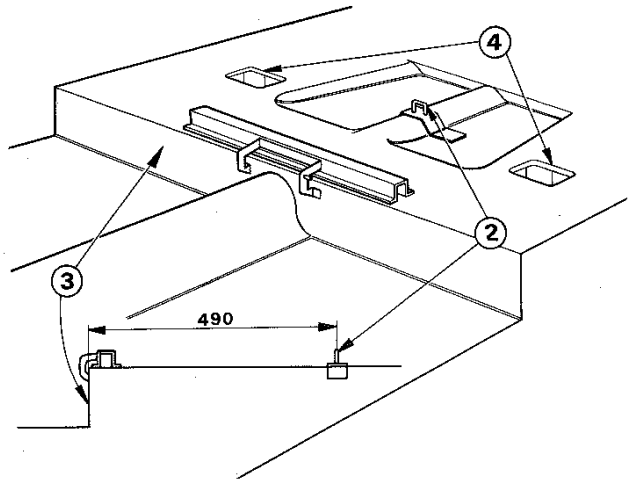

- Weld this support, together with the catch to the rear floor of the new hull, so that the catch **2** is in the centre of the floor and 490 mm from the raised plate **3**.

- Fill the two hollows **4**, designed for the locks of the separate seats, with felt.

- Fit the bench seat and check that its locking and unlocking is effected correctly.

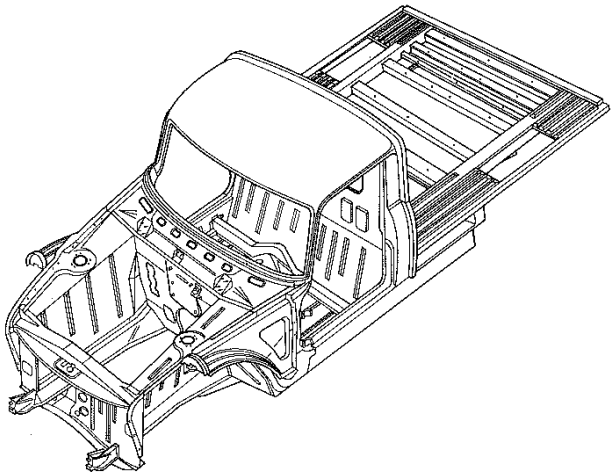

404 LIGHT LORRIES AND CAB-PLATFORMS

The bare hulls of the Light lorry and the Cab-platform are identical.

CELLETTE BODY ASSEMBLY BENCH

Universal bench - Reference : MUF 2 or EUROMUF

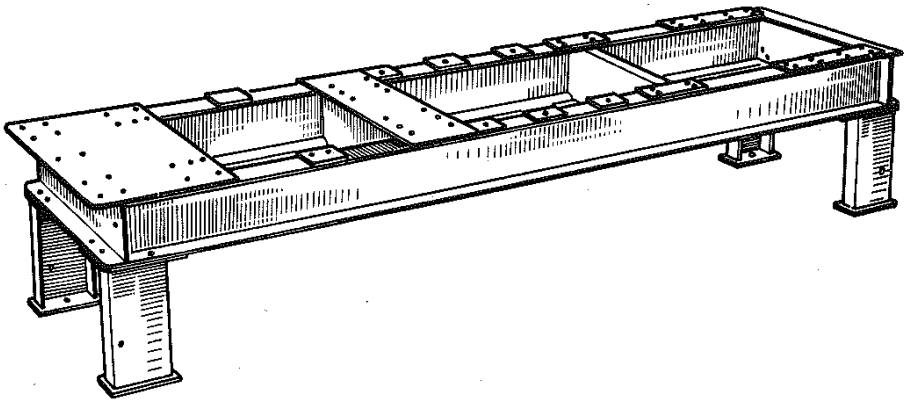

CELETTE REFERENCES FOR PEUGEOT ASSEMBLIES

TYPE OF VEHICLE	REFERENCE	DESCRIPTION
404 Saloons	ENS 22	Also includes, the part **N** for checking the stabiliser bar position on 403 Saloons with telescopic shock absorbers.
404 Convertibles **404 Coupés**	ENS 22	Is used without the 2 retaining brackets for the 404 Saloons and without the rear cross member for centering the sillboards.
404 Family Cars **404 Station Wagons**	ENS 49 or 49.01	Complement to the ENS 22. The rear floor checking frame **M** is secured to the rear support **R** of ENS 22 and is used without the 2 brackets for retaining the hull **a**.
404 Light Lorries	ENS 118	Complement to the ENS 22. - Including the supports **V** and **W** for checking the front and rear securing of the rear springs - The supports **W** are secured to an extension of the bench, ref. E.N.S. 6010 which is to be ordered separately.
	ENS 6010	Extension for the body bench.

BODY-BENCH

DESCRIPTION - CHARACTERISTICS

CELETTE BODY ASSEMBLY BENCH

Assembly for 404 Saloons Convertibles and Coupés
Ref. ENS 22

Description of the components

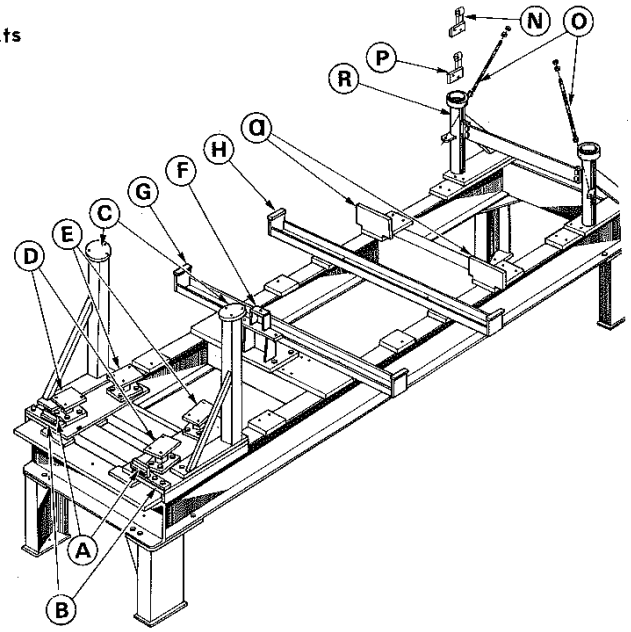

A - Supports for the lower front cross member of the front underbody.
B - Frame, secured to the bench, receiving the various checking supports for the front underbody.
C - Supports for checking the upper shock absorber mounting point on the front wing valances.
D - Supports for checking the position of the front triangle yoke securing holes.
E - Supports for checking the position of the front cross member mounting holes.
F - Supports for checking the rear engine mounting.
G - Front cross member for centering the sillboards.
H - Rear cross member for centering the sillboards.
N - Checking plate for the stabiliser bar mounting on 403 models with telescopic shock absorbers.
O - Hull to bench securing rods; the upper part of these rods are secured in the rear shock absorber mounting points.
P - Checking plate for the 404 stabiliser bar mounting point.
R - Supports for checking the upper rear spring cup position.
a - Hull retaining brackets, which press against the rear floor when redressing the rear, using a jack.

NOTE *- The parts designed for the left hand side are marked with the letter* ***L*** *and an arrow, which must be pointing towards the front of the bench, indicating the direction of fitment.*

- The two brackets **(a)** are only delivered on special order under reference 22 M
- It is necessary to remove the centering cups of the rear springs as well as the rubber thrust blocks.
- **For the 404 Convertibles and Coupés, remove the rear cross member H, for centering the sillboards and the brackets. (a).**

CELETTE BODY ASSEMBLY BENCHES

Fitting for 404 Family Cars and Station Wagons

Ref. ENS 49 or ENS 49.01*

Description of the components :

ENS 49 is used on the Celette MUF2 or EUROMUF universal benches with the n° 22 assembly with the exception of the following components :

- hull retaining bracket **(a)**.
- support for checking the position of the upper rear spring cups **R**.
- plate for checking the mounting of the stabiliser bar **P**.
- rod for securing the hull to the bench **O**.

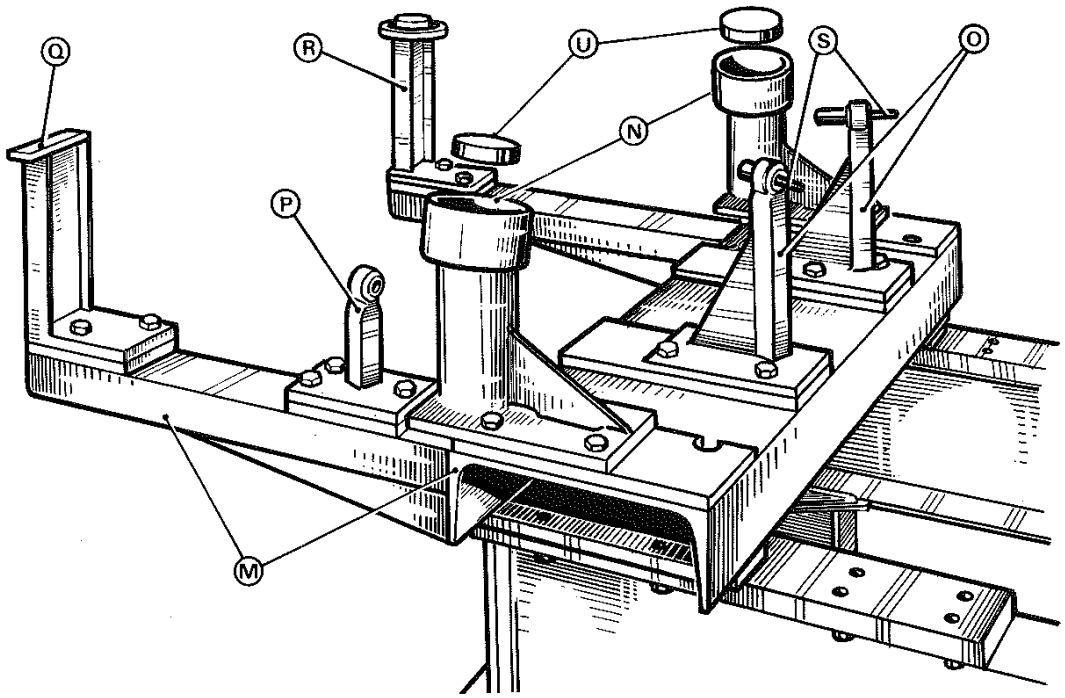

M - Frame for securing the rear assemblies.
N - Supports for checking the height of the floor under the rear spring cups.
O - Supports for centering the rear shock absorber mounting yokes.
P - Bar for checking the position of the stabiliser bar yoke.
Q - Rear floor support.
R - Centering arm for gauge unit passage on the rear floor.
S - Rods of 11.5 mm dia., which must be inserted in the supports **O** and **P** for checking the yokes.
U - Centering rings (only delivered with the 49.01 assembly).

NOTE *- The parts designed for the left hand side are marked with the letter (L) and an arrow, which must be facing the front of the bench, indicating direction of fitment.*

- The ENS 49 P, which was designed for adaptation to the « Forge de Chatillon » or « Frantz » benches, is no longer manufactured by Celette.

* Also including two pads **U** to improve the securing of the rear of the body on the supports **N**.

CELETTE BODY ASSEMBLY BENCHES

Assembly for 404 Light Lorries

Ref. ENS 118 and 6010

Description of the components

The assemblies ENS 118 and 6010 are used on the Celette MUF2 or EUROMUF universal body benches with the ENS22, with the exception of the following parts :

- Front cross member for centering sillboards **G.**
- Hull retaining bracket **a.**
- Support for checking the position of the upper rear spring cups **R.**
- Plate for checking the mounting of the stabiliser bar **P.**
- Rods for securing the hull to the bench **O.**

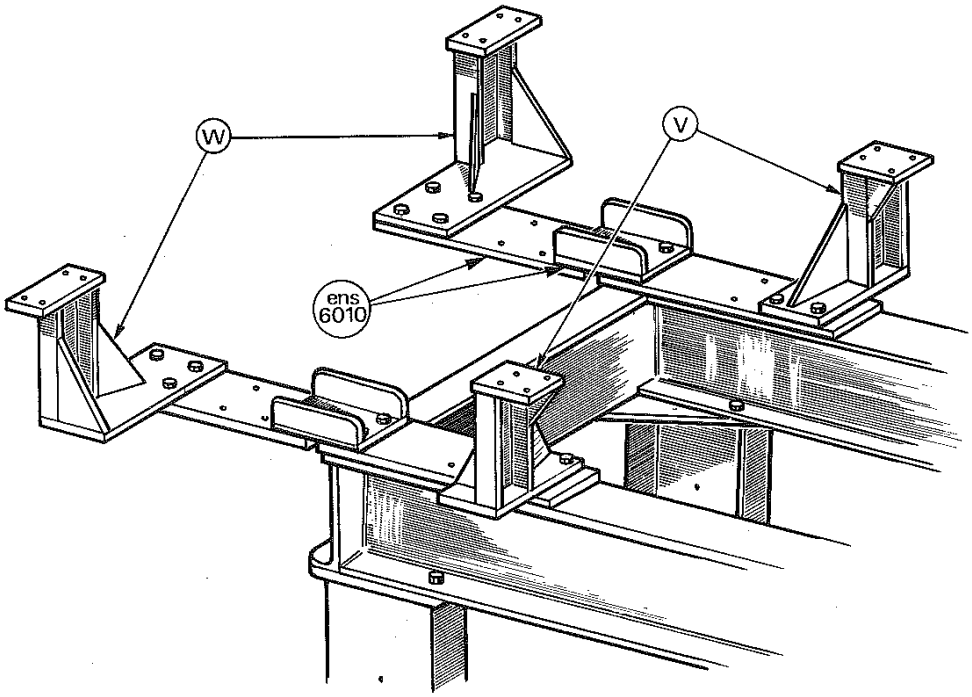

ENS 118 including :

V - Supports for checking the rear spring front mounting hole position.

W - Supports for checking the rear mounting hole position.

ENS 6010 including :

Body bench extension

The U irons for securing the extension.

NOTE *- The parts designed for the left hand side are marked with the letter* ***L*** *and an arrow, which must be facing the front of the body bench, indicating the direction of fitment.*

HULL ON THE BODY BENCH

404 ASSOCIATED VEHICLES WITH REAR CROSS MEMBER SUSPENSION

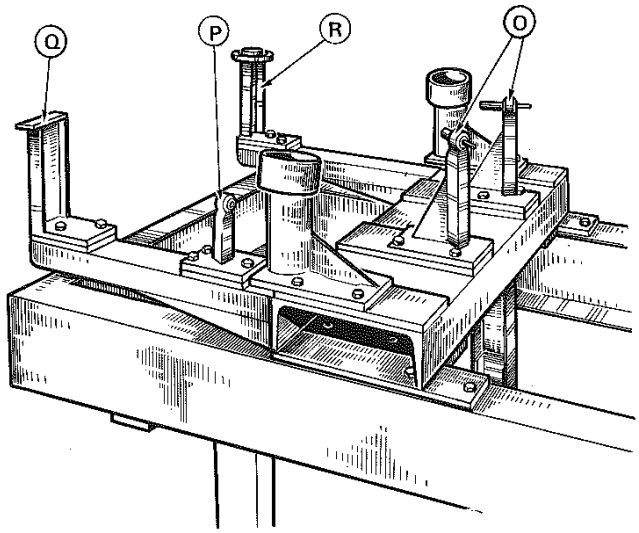

Checking the bodywork on the bench

Use the Celette bench, equipped with the ENS 49 assembly, or the «Forges de Chatillon» or «Frantz» benches, equipped with the ENS 49 P assembly.

- Place the bodywork on the bench after removing the cross member and the rubber blocks.
- The mounting points for the stabiliser bar **P** and the rear shock absorber **O**, are not used, but they remain on the bench.
- Only the following are usable : the centering arm for the gauge unit, rear left hand **R**, and the rear right hand floor support **Q**, sufficient for checking a hull or the position of the floor and rear underbody when repairing.

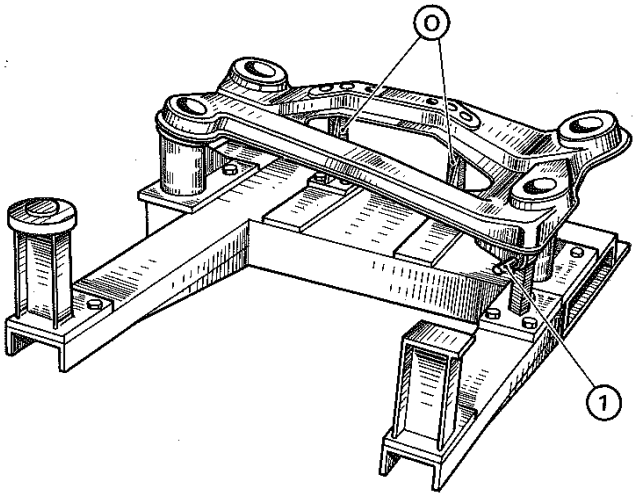

Checking the rear cross member

- Secure the upper shock absorber mounting points to the supports **O**, using two 8 mm dia. rods, short enough to enter the cross member.
- Place the cross member on the ENS 49 or ENS 49 P assembly, checking the correct insertion of the shock absorber mounting securing bolts.

If the cross member is in good condition it should settle correctly on all the check points of the assembly, the rear spring cups, and the mounting points of the stabiliser bar and the shock absorbers.

- Secure the mounting hole of the stabiliser bar **P** with an 8 mm dia. rod **1**.

PEUGEOT

File this document in the binder :

404 Workshop Manual.

	W.M.	W.F.	W.F.	W.S.	W.S.	Rec.	Rec.	S.S.	Parts
Date									
Sign.									

12

82

April 1978

SERVICE BULLETIN

12 - ELECTRICS

Externally adjustable distributor - 404 U10.

As from January 1978, the 404 U10 is equipped with a new type PARIS-RHONE distributor which incorporates a device for the adjustment of dwell with engine running.

Hence, this model can be equipped with either a PARIS-RHONE distributor with external adjustment facility or with a DUCELLIER distributor without external adjustment.

Adjustment of dwell with engine running is done from outside the distributor by acting on the fixed contact with the aid of an ALLEN key.

IDENTIFICATION

PARIS-RHONE

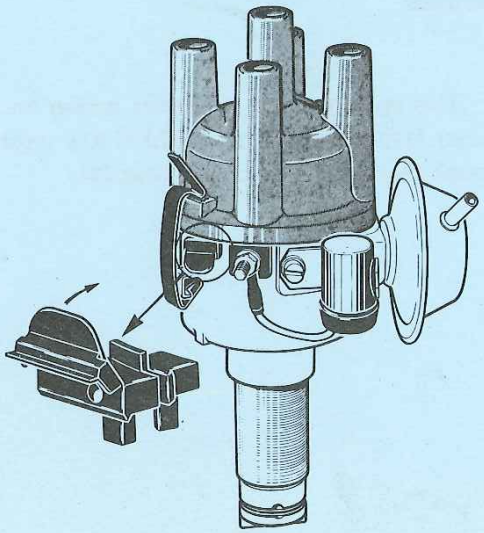

ENGINE	CURVE	R.P.D. No.
XC7	M85	5902.13

E.

Interchangeability - The new and old type PARIS-RHONE are interchangeable. Hence, when current stocks of the old type are exhausted R.P.D. will supply only the new type distributor complete.

Replacement of contacts

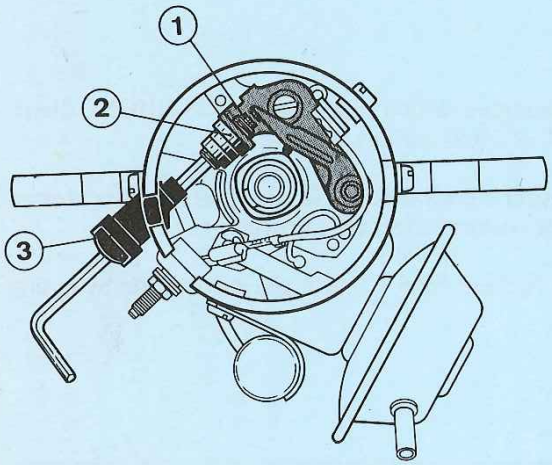

Remove-Refit :

This operation is the same as for the old type distributor.

– When refitting, take care to centre the contact **(1)** in relation to the support **(2)**.

Adjustment

This is performed by direct action on the contact **(1)**, using a 3 mm ALLEN key inserted through the hole in the plastic plug **(3)**.

Printed in France.

ELECTRICAL INSTALLATION

12

PEUGEOT

PEUGEOT

TYPE OF VEHICLE	SUPPLIER	DYNAMO				REGULATOR			
		Power in watts	Diameter in mm	Ref.	P.N.	Intensity	Number of elements	Ref.	P.N.
Up to number : 404 : 4 025 981	Ducellier or Paris-Rhône	280/300 280/300	118 115	7210 G 11.R 110	5701.21* 5701.22*	14 A 14 A	2 2	1341 YD 21	(1)
404 - from 4 025 982 404 - to 4 423 900 Up to number : 404 SL - 4 380 120 404 C - 4 497 121 404 Co - 4 497 136 404 L - 4 840 529 404 U6 - 4 723 548	Ducellier or Paris-Rhône	280/300 280/300	118 115	7210 G 11.R 110	5701.21* 5701.22*	16 A 16 A	2 2	8297 YD 21	5761.17 5761.18
As from number : 404 - 4 423 901 404 SL - 4 380 121 404 L - 4 840 530 404 U6 - 4 723 549 From beginning of series 404 ZF - 8 250 001 404/8 - 6 900 001 404 U8 - 7 010 001 404 U10 - 7 060 001	Ducellier or Paris-Rhône	300/350 300/350	102 102	7274 G 10.C 27	5701.37 { 5701.38* 5701.67	20-22 A 20-22 A	2 2	8324 8343 YD 217	5761.19 5761.20
404 C - from 4 497 122 to 4 498 707	Ducellier or Paris-Rhône	300/350 300/350	102 102	7274 G 10.C 27	5701.37 { 5701.38* 5701.67	24-26 A 24-26 A	3 3	8332 YT 215	5761.21 5761.22
404 C - from 4 498 708 to 4 499 402	Ducellier or Paris-Rhône	300/350 300/350	102 102	7274 G. 10.C 27	5701.37 { 5701.38* 5701.67	20-22 A 20-22 A	2 2	8343 YD 217	5761.19 5761.20
404 J - from 4 500 001 to 4 537 084	Ducellier	280/300	118	7229	5701.25	18 A	2	8198	5761.13
As from number 404 J - 4 537 085	Ducellier	280/300	118	7229	5701.25	20-22 A	2	8343	5761.19

* These parts are no longer supplied by the Spare Parts Department.
(1) Replace the 14 Amp. regulator with one of 16 Amp.

ELECTRICAL INSTALLATION

DYNAMOS

CHARACTERISTICS

Ducellier 7229 (404 Jaeger)

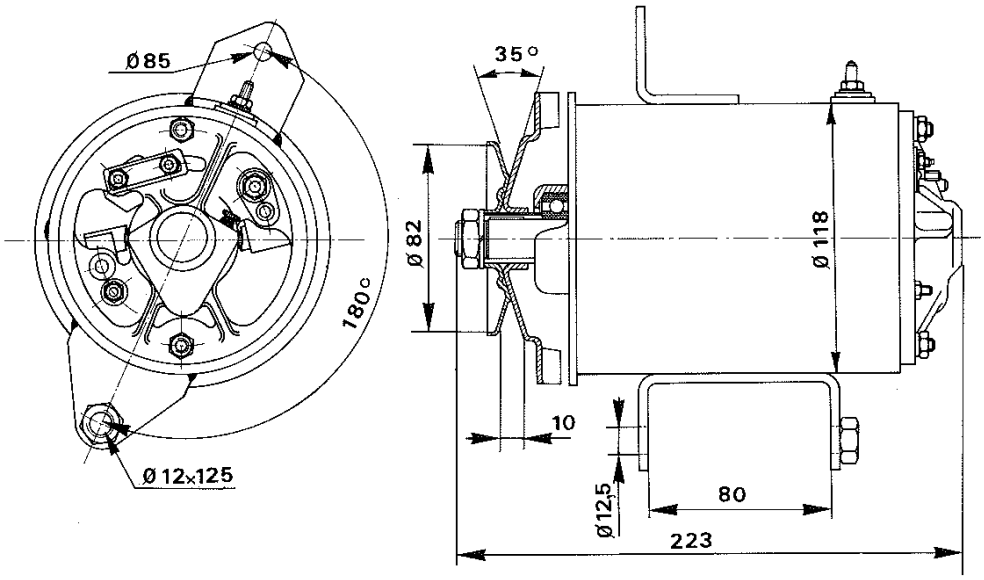

Bipolar shunt dynamo with :

- Negative pole and common point for excitation to earth

- Additional brush for the Jaeger coupler feed.

Voltage	12 V.
Maximum power with regulator	270 W.
Cut in speed when warm	1,280 r.p.m. (maximum)
Maximum rotation speed	7,400 r.p.m.
Inducer resistance at 20° C.	7 Ohms
Spring weight on new brushes	650 g. (approximately)
Ø of the body	118 mm.
Ø of the pulley	82 mm.
Corresponding regulators	8198 - 18 Amp. 8324 - 20 - 22 Amp. 8343 - 20 - 22 Amp.

CHARACTERISTICS

Ducellier 7274

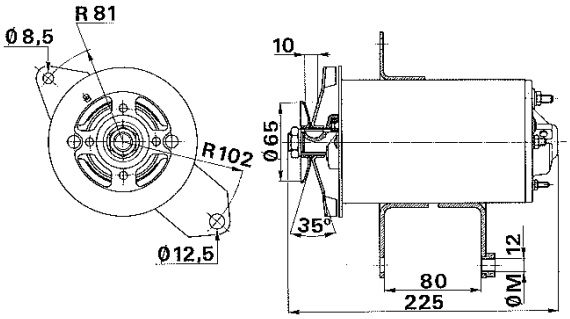

Paris-Rhône G10 C27

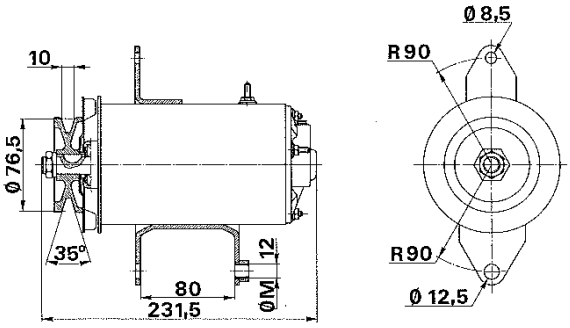

Bipolar shunt generator with negative pole and common point from excitation to earth

		DUCELLIER	PARIS-RHONE
Voltage		12 volts	
Power		300 watts	
Maximum cut in speed when hot		1,800 r.p.m.	1,550 r.p.m.
Maximum speed		10,000 r.p.m.	7,500 r.p.m.
Armature resistance at 20° C		7 ohms ± 0,5	
Spring force on new brushes		650 g.	
Ø of the body		102 mm	
Ø of the pulley		65 mm	76,5 mm
Drive ratio		1,79	1,5
*Corresponding regulators	20-22 A	8 343 8 324	YD 217
	24-26 A	8 332	YT 215

* The Paris-Rhône and Ducellier regulators with the same intensity setting are interchangeable.

ELECTRICAL INSTALLATION

DYNAMOS

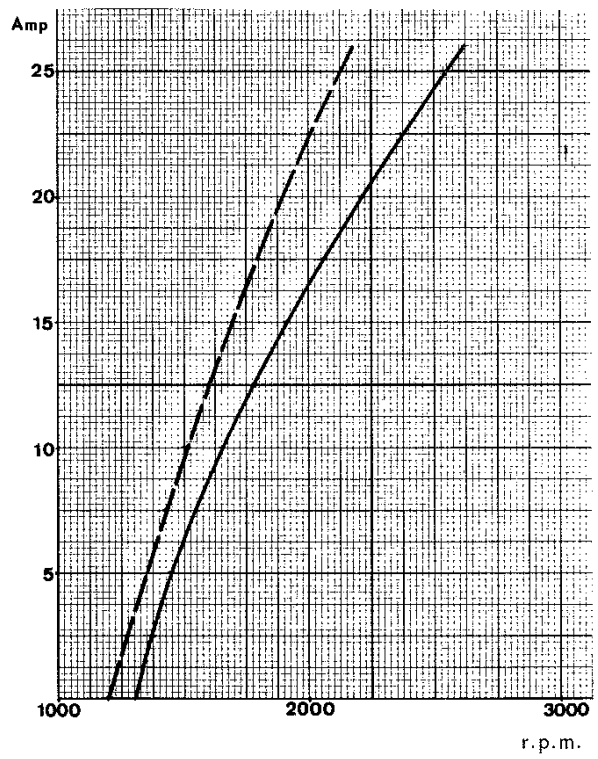

OPERATING CURVES

Ducellier - 7210-7229 Ø 118

Paris-Rhône - G11.R110 Ø 115

Power - 280/300 W

Curve showing minimum output at the main brush with a constant voltage of 13 V.

——— : Hot
– – – – – : Cold

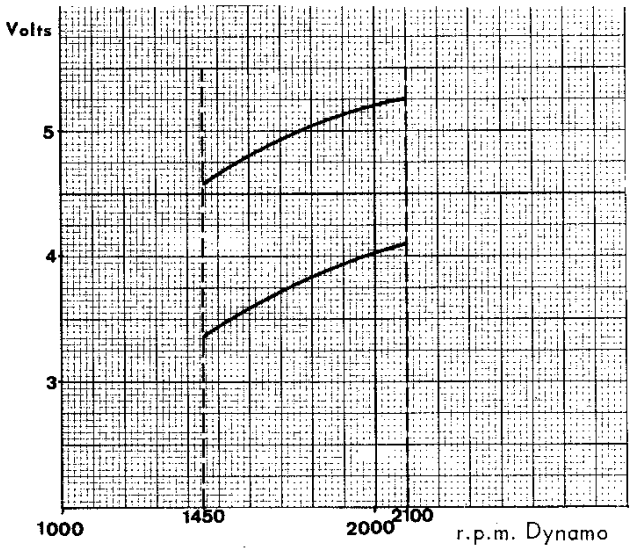

Voltage curve of the additional brush

Curve reading with :

- Main brush output : 3A under 12 V
- Resistance at the 3rd brush terminals : 3 ohms.

The arc of the curve reading must correspond with an increase of 0.4 V between 1,450 r.p.m. and 2,100 r.p.m.

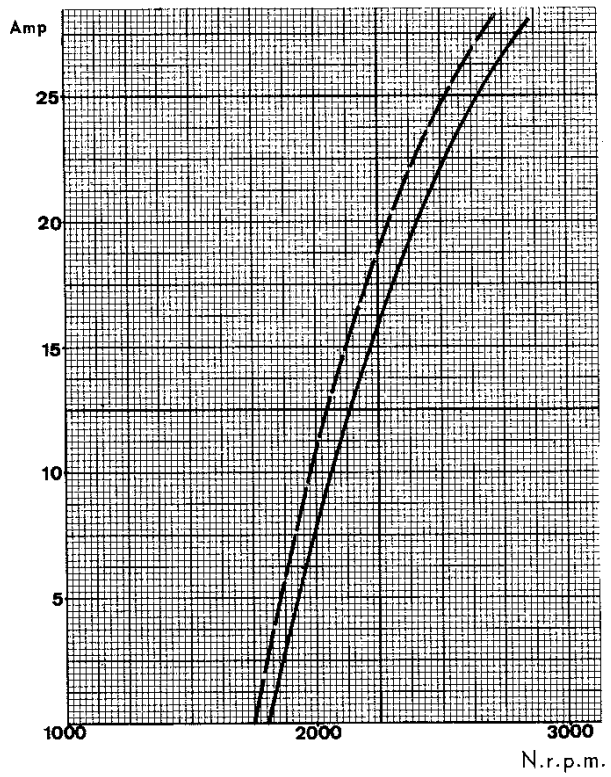

OPERATING CURVES

Ducellier - 7274 - Ø 102

Power - 300/350 W

Minimum output curve at a constant voltage of 13 V.

——— : hot
- - - - - - - - - : cold

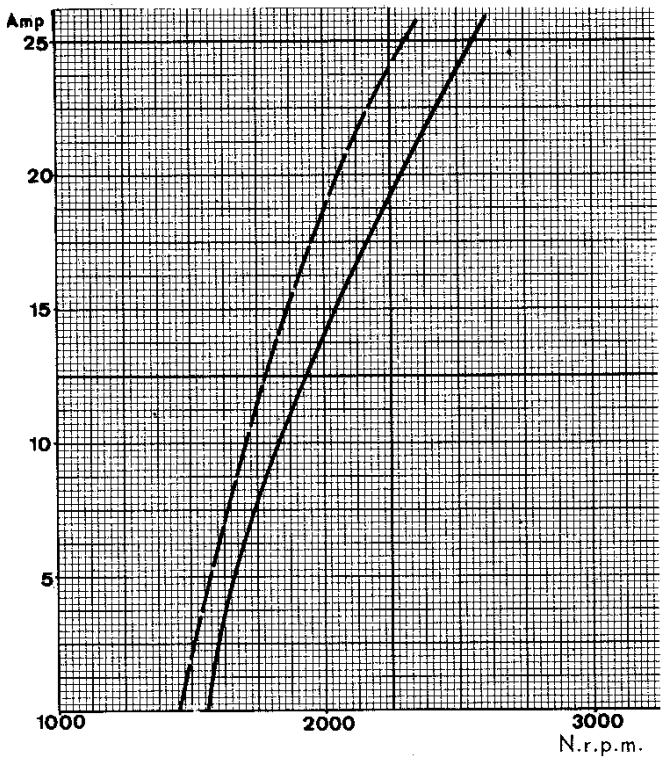

Paris-Rhône - G10-C27 Ø 102

Power - 300/350 W

Minimum output curve at a constant voltage of 13 V.

——— : hot
- - - - - - - - : cold

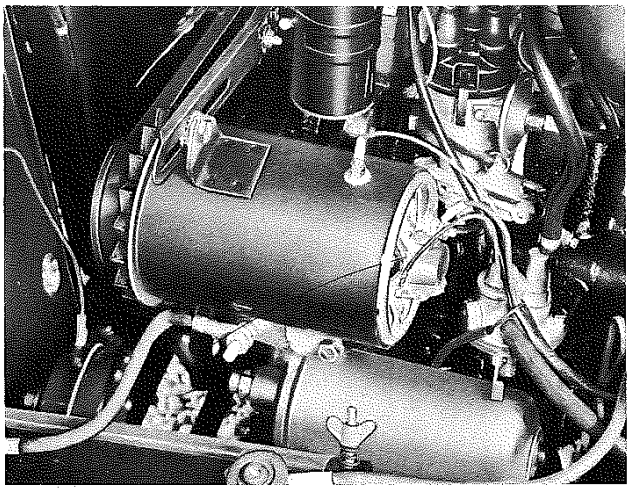

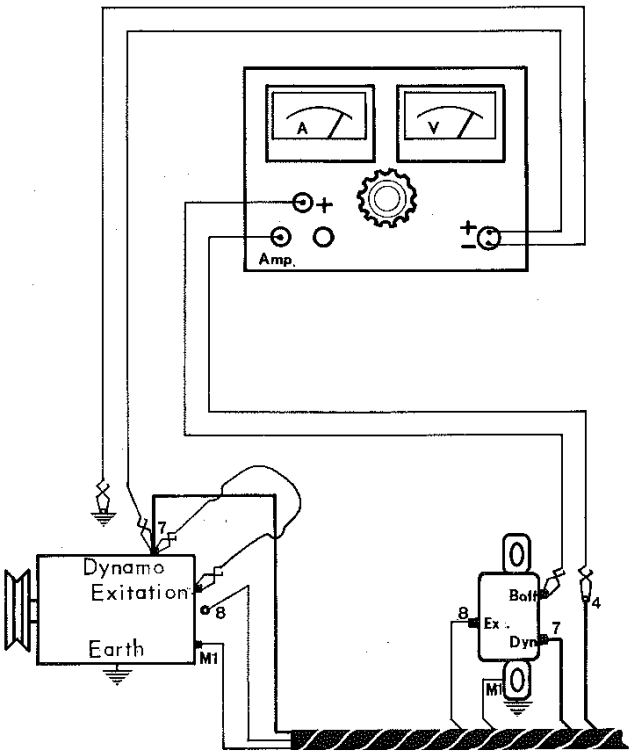

MAINTENANCE

Lubricate the rear bearing of the dynamo every 3,000 miles (5,000 km) with a few drops of engine oil.

CHECKING THE CHARGE CIRCUIT

Preparation

- Make sure the leads in the charge circuit are tight.
- Check the insulation of the leads and their continuity.
- Check the fan belt and its tension.

- **Disconnect the lead n° 8 from the dynamo** to separate the regulator whilst checking.
- Connect the voltmeter : + lead in shunt to the terminal DYN- on the dynamo ; - lead in series to the earth.
- Connect the ammeter in series : + lead to the terminal BAT on the regulator ; - lead to the previously disconnected n° 4 lead.

Testing

- Run the engine at a constant speed of approximately 1,200 r.p.m.
- Using a jumper lead, bridge the EXC terminal and the DYN terminal to close the dynamo excitation circuit.

1. The voltmeter should show a reading of 12 V.
2. If the output (Amp.) is stable and exceeds the nominal intensity of the dynamo check and, if necessary, replace the regulator (the battery should be discharged. If not switch on the headlamps).
3. If the output is unstable or non existant check the dynamo and, if necessary, recondition it.

***NOTE** - To check the dynamo or the regulator, either on the car or on a test bench, follow the manufacturer's instructions.*

CHART FOR CHECKING THE DYNAMO-REGULATOR

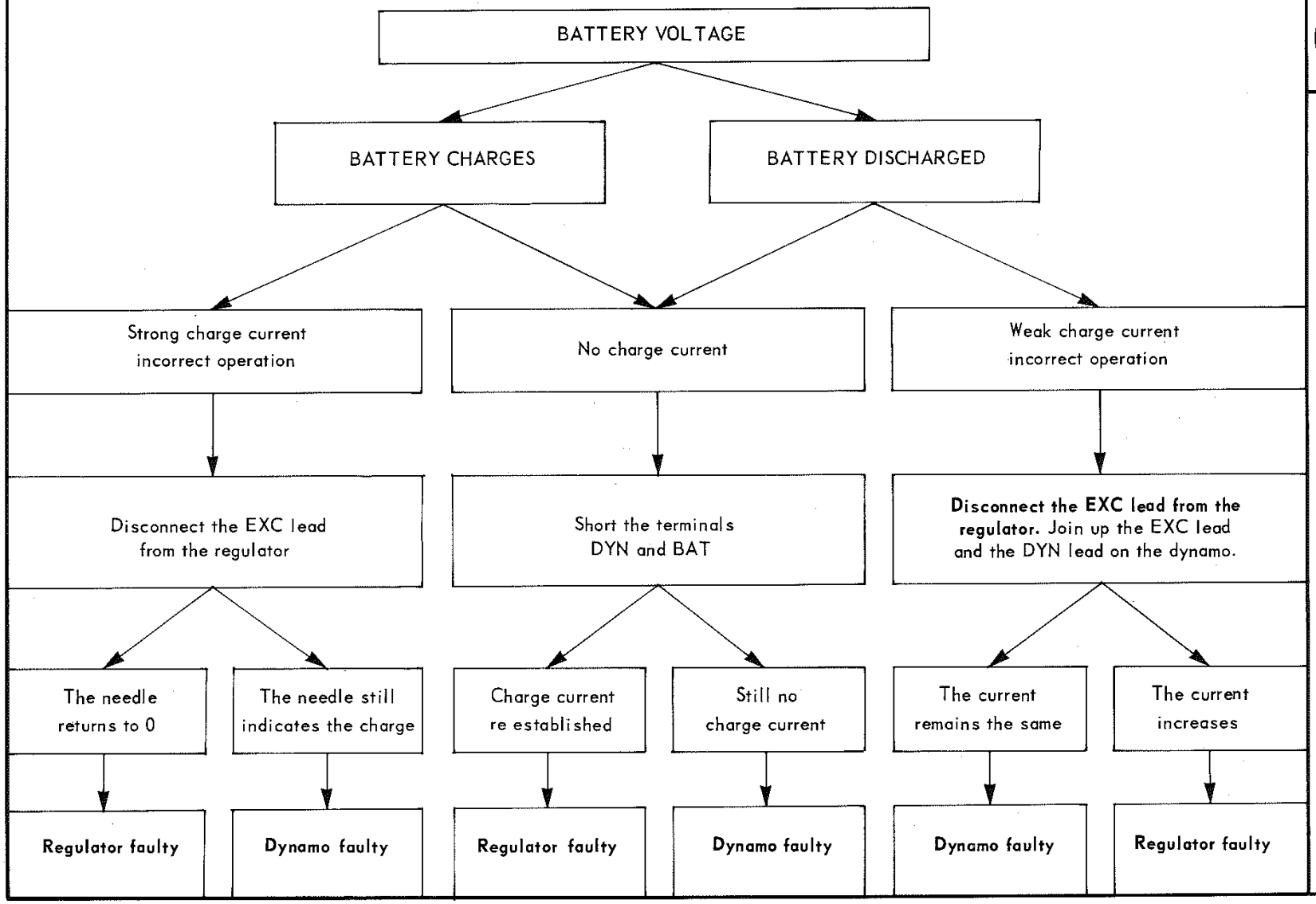

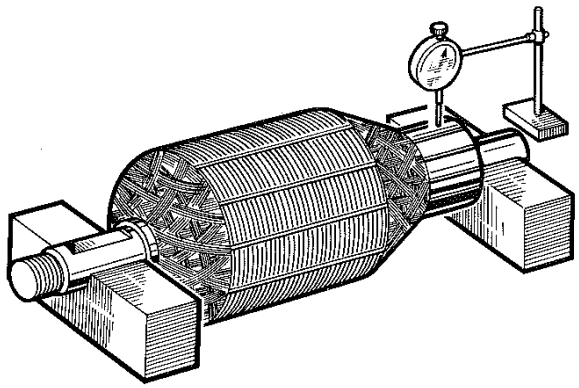

CHECKING A DISMANTLED DYNAMO

Mechanical check of the armature

- Check :
  - the tin soldering on the commutator
  - the out of true of the commutator (0.05 mm Maxi).
  - the out of true of the armature (0.10 mm Maxi).

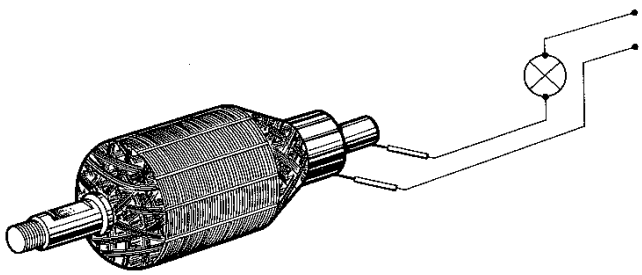

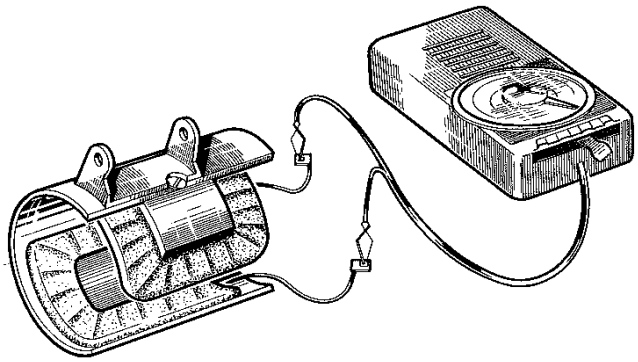

Electrical checks.

ARMATURE

- Check :
  - The insulation of the commutator using a test bulb of 110 V 15 W.
  - The short circuits using a "buzzer" and a saw blade.
  - The continuity of the windings (The broken windings indicating a weaker value).

FIELD COILS

- Check :
  - the insulation using a test bulb
  - the resistance value using the microban.

BRUSH HOLDER END PLATE

- Check :
  - the insulation of the + brush using a test bulb.

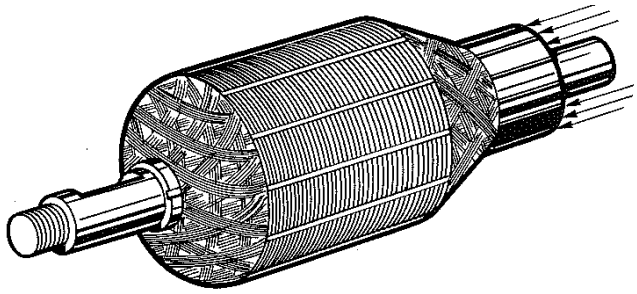

RECONDITIONING

- Clean the commutator using very fine emery cloth.
- Rectification of 1.5 to 1.8 mm from the initial diameter.
- The segment grooves should be cut to a depth of 0.05 mm.
- Check the freedom of the brushes in the holders.

Length of the brushes :

Ducellier
Paris-Rhône } New 21 mm - worn 11 mm.

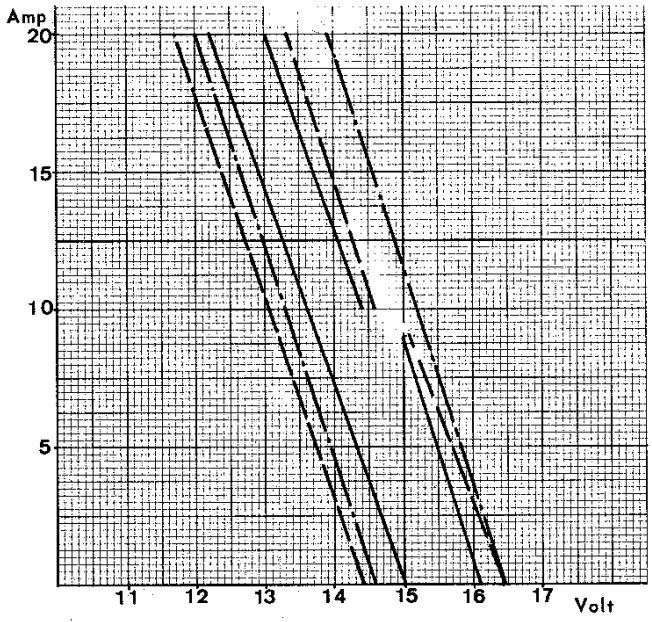

OPERATING CURVES

16 Amp. 2 elements

——————— hot

– – – – – – – cold (Ducellier)

—·—·—·— cold (Paris-Rhône)

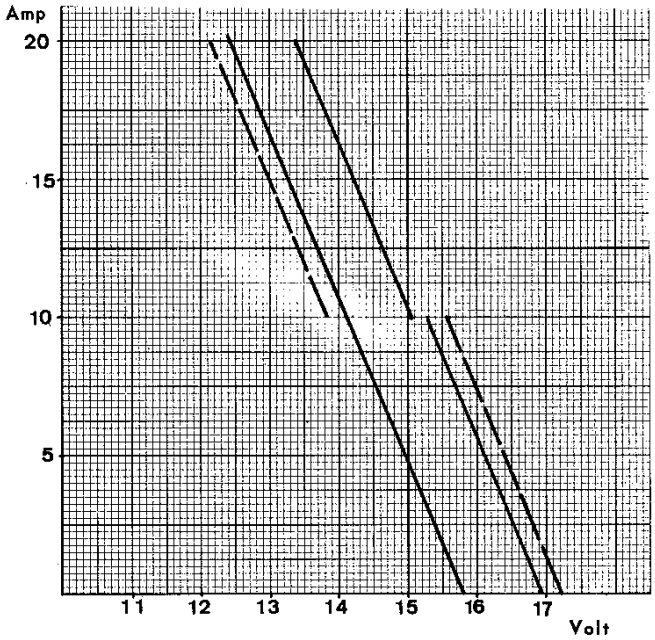

Ducellier 8198 (with Jaeger coupler)

18 Amp. 2 Elements

Cut in voltage : 12 to 13 V
Maximum return current : 5 A
Cut in - cut out difference : 1.5 V

Curves (hot)

——— : limit curves not to be exceeded.

ELECTRICAL INSTALLATION

REGULATORS

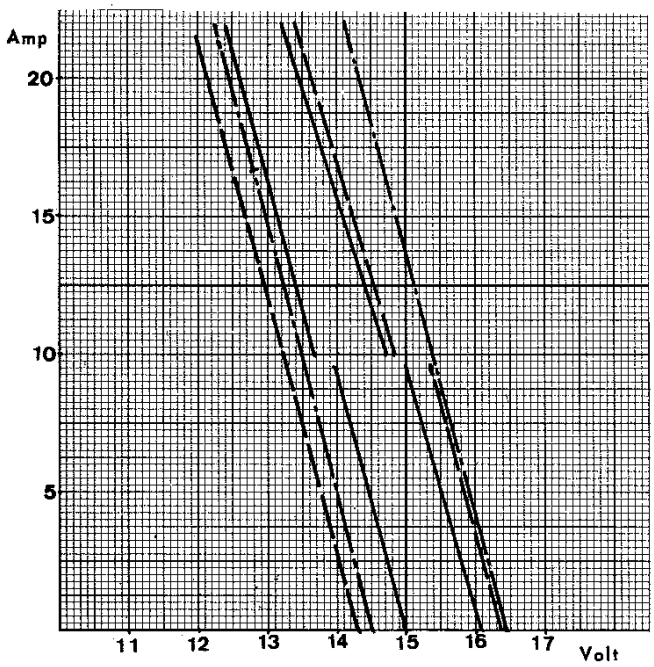

OPERATING CURVES

Ducellier - 8324 and 8343
Paris-Rhône - YD 217

20 - 22 Amp. 2 Elements

Cut in voltage : 12 to 13 V
Maximum return current : 5 Amp.
Cut in - cut out difference : 1.5 V

——— : Hot
- - - - - : Cold (Ducellier)
—·—·— : Cold (Paris-Rhône)

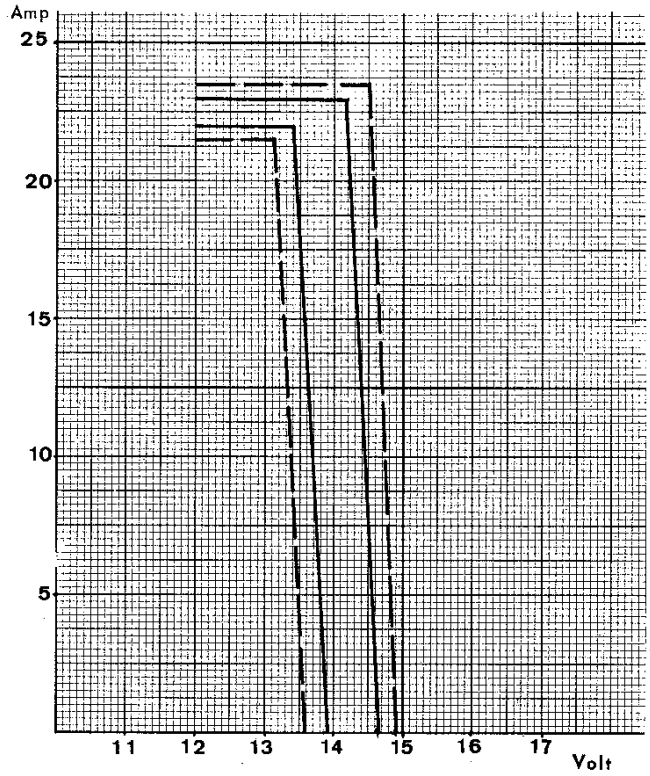

Ducellier - 8332

Paris-Rhône - YT 215

24 - 26 Amp. 3 Elements

Cut in voltage : 12 to 13 V
Maximum return current : 5 Amp.
Cut in - cut out difference : 1.5 V

——— : Hot
- - - - - : Cold

IDENTIFICATION - CHARACTERISTICS

TYPE	THREE PHASE ALTERNATOR			
	Supplier	Power in Watts	Reference	P.N.
As from number : 404 KF - 4 589 001 404 C - 4 499 501 404 USA - 5 311 001 404 ZF USA - 8 251 301 404 U6 USA - 1 928 101 404 U6ZF USA - 7 100 001	SEV Motorola Paris-Rhône	400 W 400 W	A 14/30 A 13/R 15	5701.61

REGULATOR		
Supplier	Reference	P.N.
Paris-Rhône Ducellier	AYA 21 8349 A	5761.23

TYPE	ALTERNATOR			
	Supplier	Power in Watts	Reference	P.N.
As from number : 404 - 5 504 801 404 ZF - 8 259 901 404/8 - 6 906 201 404 L - 6 844 701 404 L Break - 6 834 786 404 U6 - 4 781 801 404 U8 - 7 016 801 404 U10 - 7 071 901	Ducellier Paris-Rhône	350 W 350 W	7529 A A 13 M3	5701.72

REGULATOR		
Supplier	Reference	P.N.
Ducellier Paris-Rhône	8362 A AYA 21 (yellow reference)	5761.24

ELECTRICAL INSTALLATION
ALTERNATORS - REGULATORS

S.E.V. MOTOROLA A 14/30 - PARIS RHONE A 13 R 15 ALTERNATORS

Maximum output curve with a constant voltage of 13.5 V.

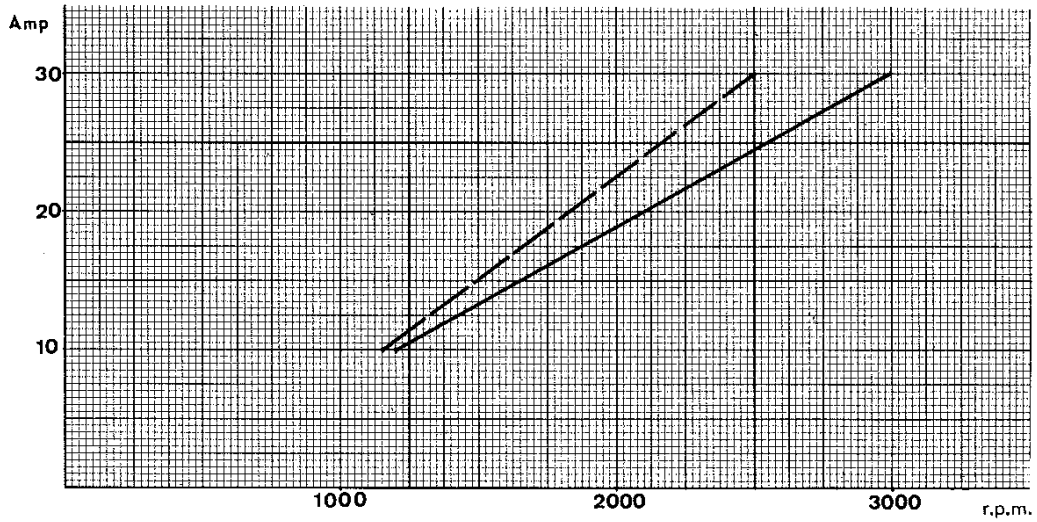

- - - - - - - - - : cold
———— : hot

CHECKING THE OUTPUT

This check is to be effected at 2 points under 13.5 V.

Output-power	Cold	Hot
Output at idling speed 10 A.	1,150 r.p.m.	1,200 r.p.m.
Nominal power 30 A.	2,500 r.p.m.	3,000 r.p.m.

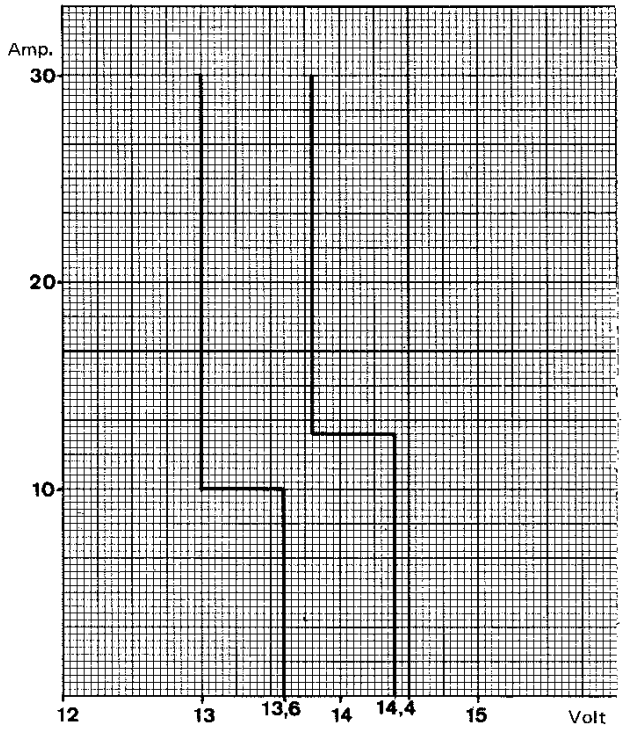

Paris-Rhône AYA 21 regulator

- Maximum voltage 14.4 V.

OPERATING CURVES

Values when hot at a constant speed of 4,000 r.p.m.

ESSENTIAL PRECAUTIONS TO BE TAKEN WHEN WORKING ON CAR FITTED WITH AN ALTERNATOR

One must never :

- Charge the battery without disconnecting both terminals.
- Invert the connections of the battery, regulator or alternator leads.
- Disconnect the battery while the alternator is operating.
- Start the engine with the battery disconnected
- Operate the regulator without its being linked to the alternator earth.
- Earth the alternator or regulator excitation leads.
- Solder or unsolder the diodes without isolating them from the heat.
- Overload the diodes.
- Connect a car radio to the electric circuit controlled by the Neiman lock (the connection must be made at fuse n° 2).
- Carry out arc-welding on the car without disconnecting the alternator.

Failure to adhere to any one of these precautions will cause the regulator or the alternator and, in particular, the diodes to be put out of order.

ELECTRICAL INSTALLATION
ALTERNATOR

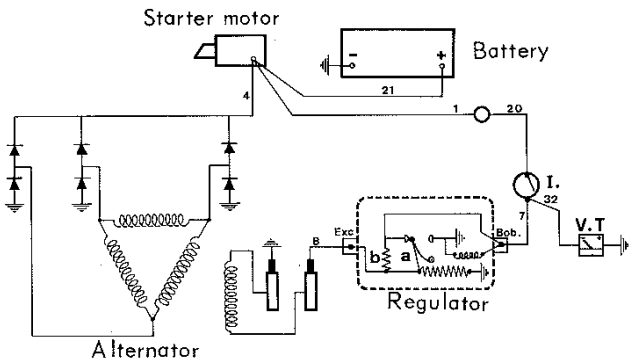

CHECKING ON THE CAR

CHARGING CIRCUIT

Improper operation of the charging circuit is not always caused by a faulty alternator or regulator.

The following should always be checked before dismantling the components :

a - Belt, for condition and correct tension.

b - Connections and earthing at the alternator, regulator, starter motor, battery and thermal voltmeter.

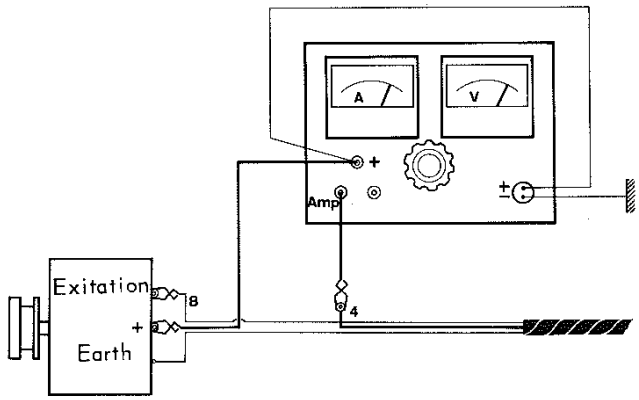

CONNECTING THE METERS

A Souriau type 1190-1290 Volt-Ammeter should preferably be used ; a standard voltmeter and ammeter (60 Amp.) can also be used.

- Slacken the earth wing nut by a few turns.
- Disconnect lead n° 4 from the + terminal of the alternator.

Using the cables provided in the tool chest, connect the following :
- Alternator + terminal to ammeter + terminal.
- Lead n° 4 to ammeter "AMP" terminal.
- Connect the test voltmeter.
- Tighten the earth wing nut.
- Reset the clock to correct time.

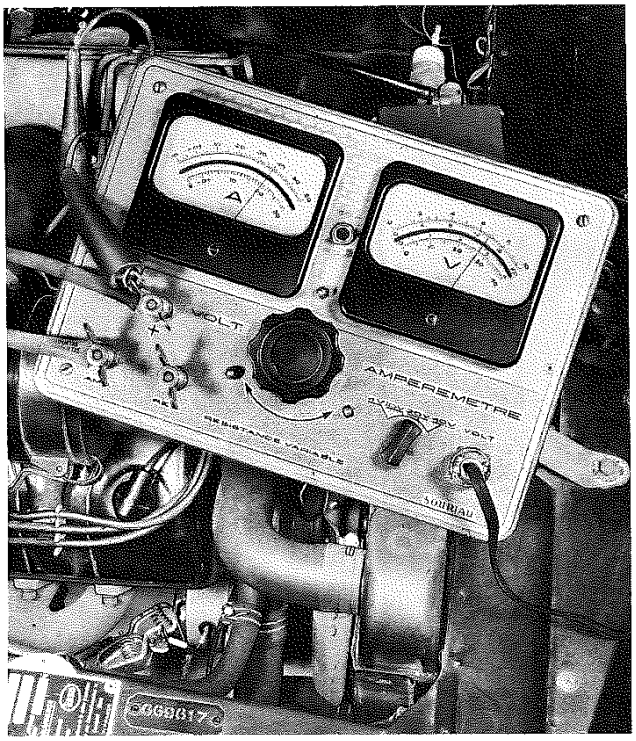

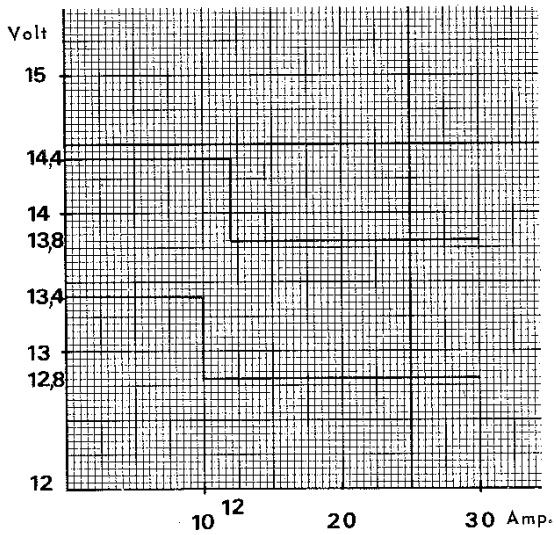

CHECKING THE CHARGING CIRCUIT

The voltmeter should indicate the circuit voltage.

- actuate the starter motor.

The voltage should not drop below 9 volts; if it does, the battery charge is low the terminals are coated with sulphate, or the starter motor requires checking.

- accelerate engine to 2,500 r.p.m. approx.

- **Immediately note down maximum output current and corresponding voltage.**

Current should be 30 - 35 Amp., if voltage is less than 13 volts. If the battery is fully charged, it may be necessary to switch on the headlights and all other significant electric components to obtain 30 - 35 Amp.

The regulator should begin operating when the voltage exceeds 13 Volts ; alternator voltage should then be between the limits indicated on the curve opposite.

In all cases, the voltage should never exceed : 14.4 V.

If this is not the case, the regulator must be replaced.

If battery charge is low and maximum alternator output is significantly lower than 30 Amp. at 2,500 r.p.m., the regulator must be replaced ; if this is not the case, one or more of the diodes are broken or shorted, and the alternator should be overhauled.

NOTE - *A broken diode causes a drop of about 5 Amps in the charging current.*

A shorted diode limits charging current to 7 or 8 Amps and causes the alternator to whine during operation.

ELECTRICAL INSTALLATION

ALTERNATOR

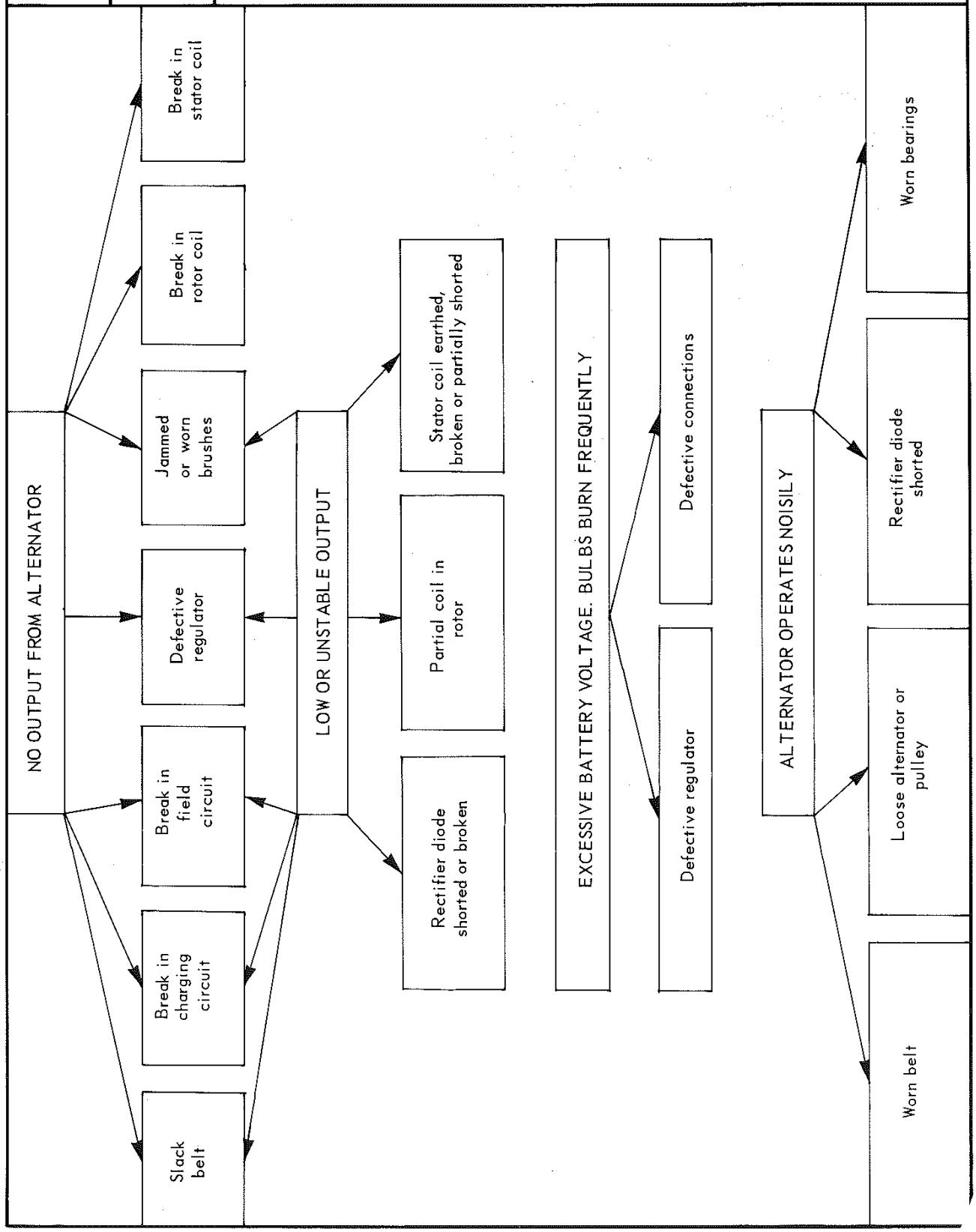

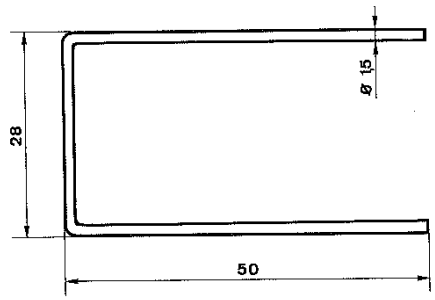

TOOLS TO BE USED

0.1201

Brush retaining tool for Paris-Rhône alternators.

RECOMMENDED TOOLS

Description	Make
Voltmeter - Ammeter Microban Puller	Souriau, Type 1190- 1290 SEV Marchal Facom U 35

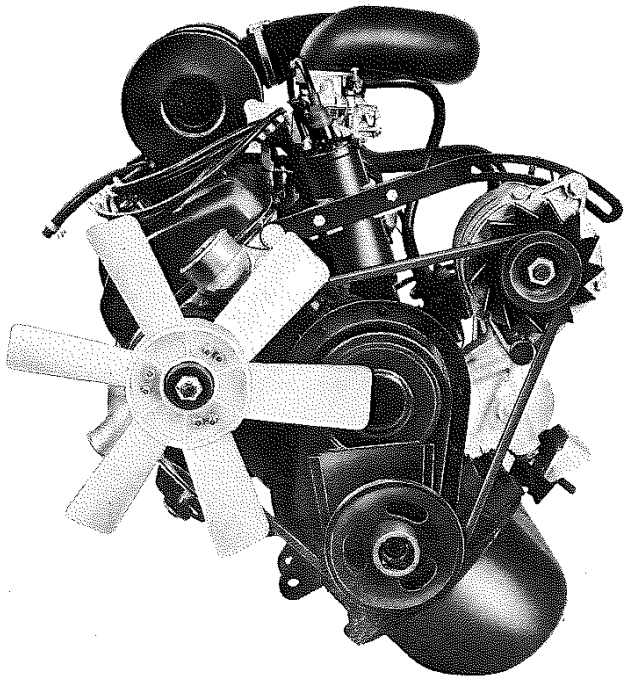

REMOVAL OF THE ALTERNATOR

- Disconnect the battery
- Disconnect the alternator leads.
- Remove :
  - the tensioner bolt
  - the lower pivot bolt and the alternator

REFITTING THE ALTERNATOR

In the opposite order to removal.

- Adjust the fan belt tension.

  Engine cold : draw two marks on the fan belt 100 mm apart and tension the belt until they are 102 to 103 mm apart.

- Tighten the pivot bolt to 33 ft.lbs (4.5 m.kg).

ELECTRICAL INSTALLATION

THREE PHASED ALTERNATOR S.E.V.

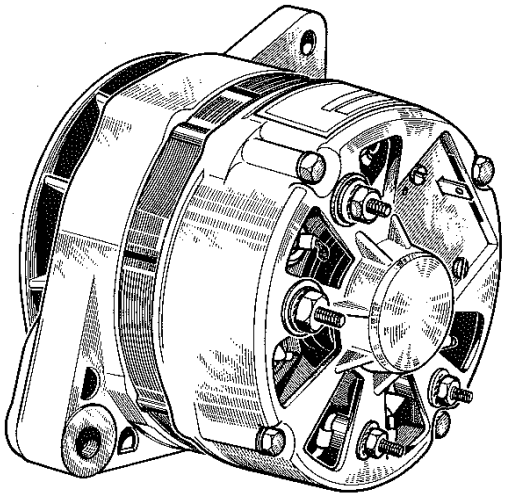

ALTERNATOR DISMANTLING

- Remove brush-holder.
- Draw a reference mark on the stator and both front and rear housings.
- Remove all 4 bolts, together with their nuts and washers.
- Using a plastic mallet, tap the front housing gently to free the stator.

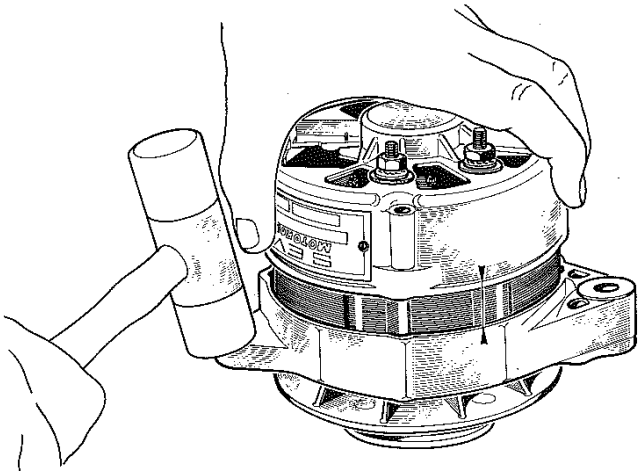

REMOVING THE STATOR FROM THE REAR HOUSING

- Remove both nuts **2** from the + terminals and set aside the externally-toothed, plain, and insulating washers.
- Remove both nuts **1** from the - terminal and set aside the externally-toothed lockwashers.
- Remove the stator from the rear housing.
- Set aside both insulating washers **4** and tubes **3** used with the + terminals.

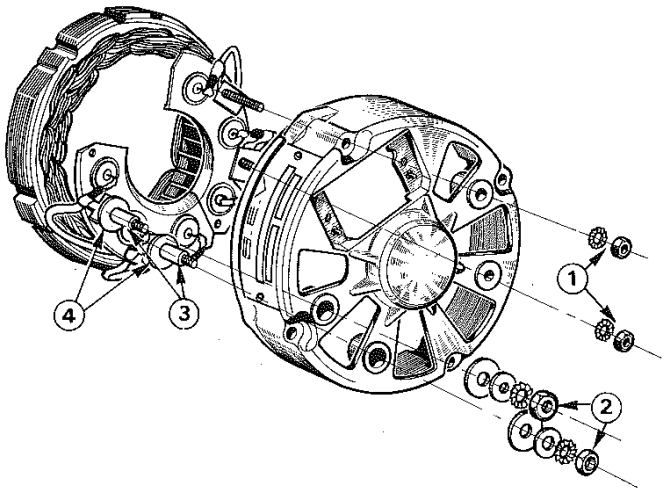

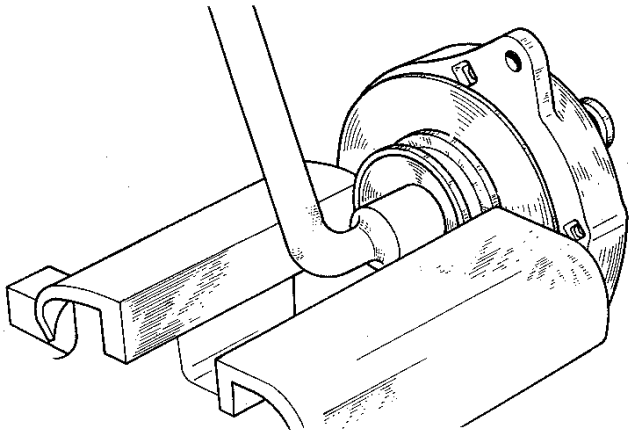

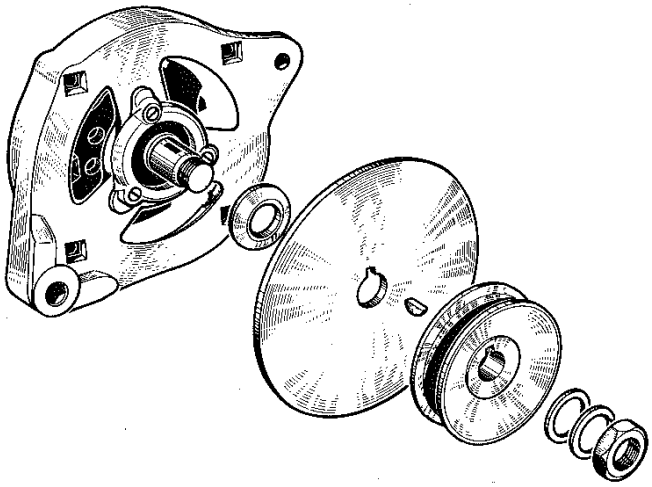

FRONT HOUSING DISMANTLING

Dismantling is required only if the front bearing must be replaced.

- Slacken pulley nut after clamping pulley in a vice equipped with lead jaws.
- Remove pulley, fan, and spacer.
- Remove the three screws from the front bearing cover.
- Remove rotor and bearing assembly from front flange by tapping the shaft end gently.

IMPORTANT

The rotor is pressed onto the shaft and should never be separated from the inner bearing cage, as the polar pieces would then separate from the coil and damage it irremediably.

ROTOR BEARING REMOVAL

Pull out the front bearing, using a standard puller "Facom U 35" or similar. Set aside bearing cover.

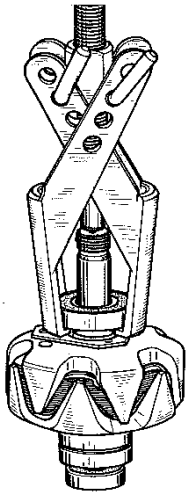

To remove rear bearing : an 8-mm dia. x 20 mm long section of steel rod should be inserted between puller and rotor axle end face.

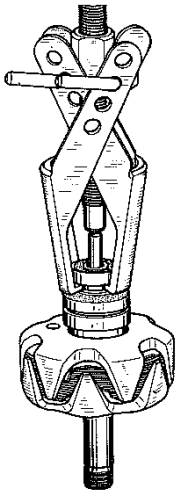

ELECTRICAL INSTALLATION

THREE PHASED ALTERNATOR S.E.V.

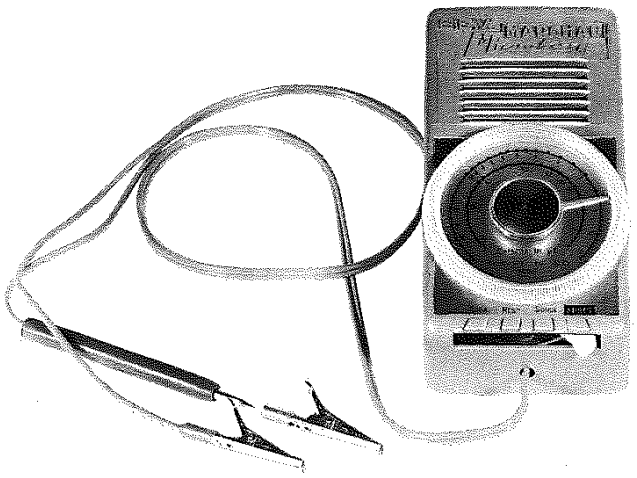

CHECKING AND TESTING

A "MICROBAN" SEV MARCHAL should preferably be used ; this equipment can be replaced by a standard ohmmeter. Never use a test lamp connected to the a.c. mains ; the operating voltage must never exceed 12 Volts.

Preparation

All dismantled parts should be cleaned in trichlorethylene and dried with compressed air.

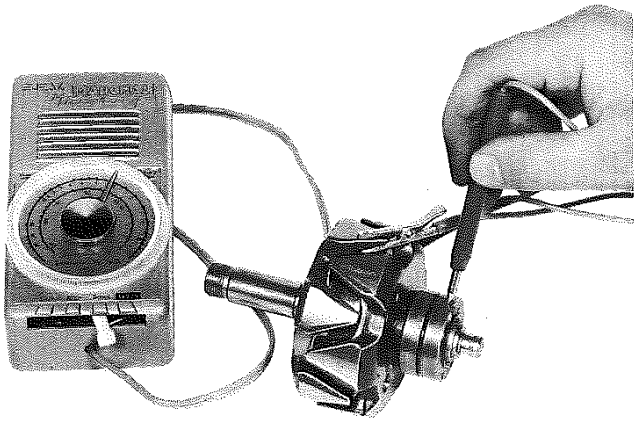

ROTOR

Resistance at 25° C (77° F) : 4.5 ± 3 ohms.

- Set the "MICROBAN" tester to "Sonde" (probe).
- Connect the alligator clip to the rotor jaws.
- Place the red probe in contact with one of the commutators.

No tone should be heard, or it should be barely audible.

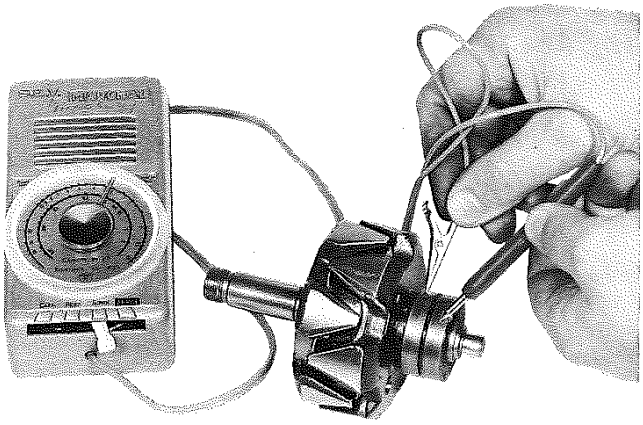

Now place the alligator clip on the other commutator.

A tone of **maximum loudness** should be heard, as when both probes of the "MICROBAN" are shorted.

- Switch off the "MICROBAN".

Scratched collector rings should be polished with fine-grain abrasive paper; the rotor must be rotated during the polishing operation to avoid forming flats which would cause vertical oscillations of the brushes.

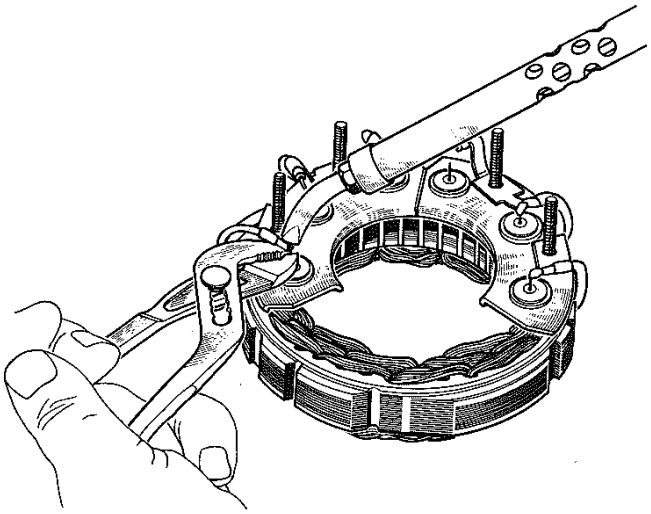

DISCONNECTING THE DIODES FROM THE STATOR

- Locate all wires connecting the diodes to the stator and find out the location of the diode-holders.
- Use a high power (more than 150 watts) and very hot soldering iron to unsolder the wires, taking care to clamp the pigtail of the diodes with a pair of pliers to act as a heat shield and protect the diodes from damage caused by heat.

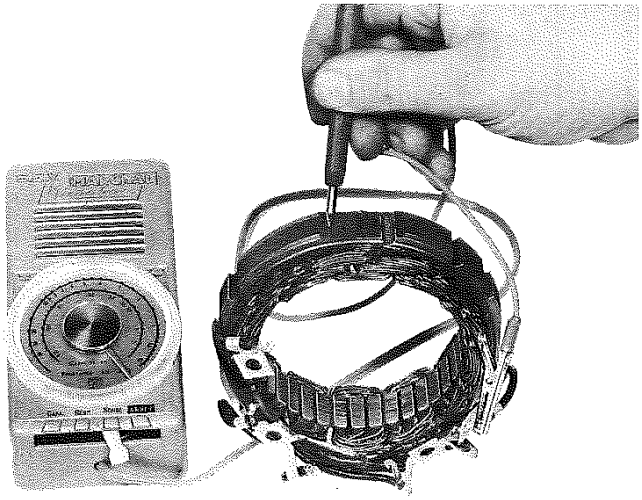

CHECKING THE DISMANTLED STATOR

A few coils may be shorted inside the stator ; this fault causes overheating and can be easily detected by visual checking.

a - Insulation

Set MICROBAN tester to "Sonde" (probe).

- Connect one probe to one of the coil output leads.
- Connect the iron core with the other probe.

No audible tone : the coil is not earthed

Audible tone : the coil is earthed

- Check all three phases as indicated above.

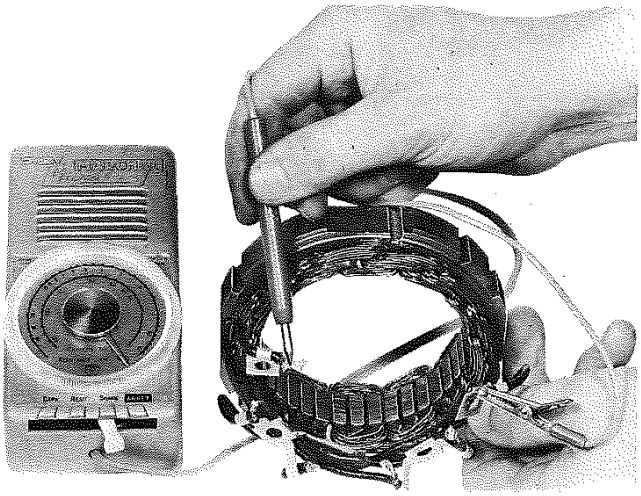

b - Continuity

- Connect a probe to one of the coil output leads.
- Contact all the other output leads successively with the other probe.

The tone should be heard without any interruption, even when the leads are moved.

ELECTRICAL INSTALLATION
THREE PHASED ALTERNATOR S.E.V.

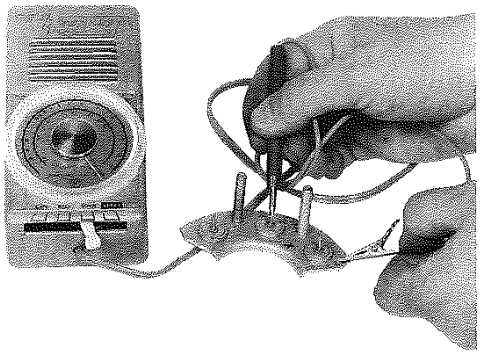

CHECKING THE DISCONNECTED DIODES

Set "MICROBAN" tester to "Sonde" (probe).

- Connect one probe to the pigtail of a diode, and the other probe to the diode holder.

- Now reverse the connection

A tone should be heard for **one direction of connection only.**

- **Tone heard for both directions** : shorted diode.

- **No tone** : broken diode.

Check all diodes in succession as indicated above.

NOTE :
The complete diode holder assembly must be replaced even if one diode only is defective.

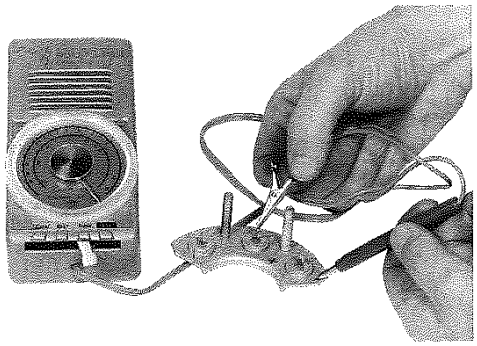

CHECKING THE BRUSH HOLDER

Set "MICROBAN" tester to "Resistance" and turn pointer to zero.

a - Continuity

- Connect ohmmeter between insulated brush **1** and terminal strip **2**.

No tone crackling noise should be heard, even when the brush and "shunt" are moved.

- Repeat the above check for the negative brush.

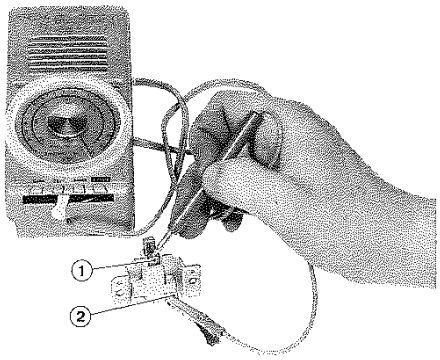

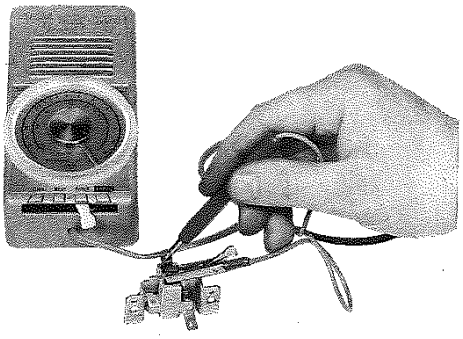

b - Insulation

Set "MICROBAN" tester to "Sonde" (probe).

- Connect tester between insulated brush and negative brush.

No tone should be heard.

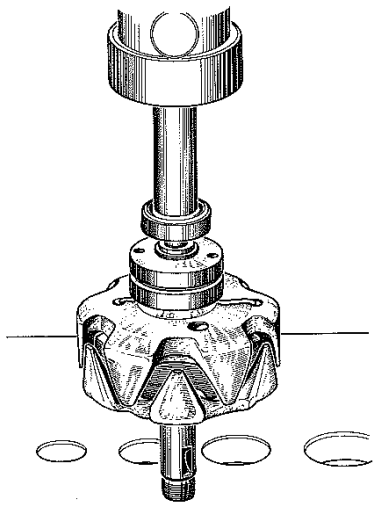

ALTERNATOR RE-ASSEMBLY

Re-assemble the alternator in the order given below after all parts have been checked and cleaned.

Rear bearing re-installation

Install a new rear bearing with an arbor press, using a length of tubing resting only on the inner race of the bearing (10 × 50 mm tubing).

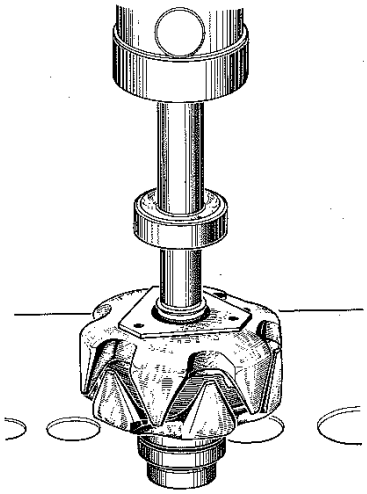

Front bearing re-installation

- Install bearing cover with bosses facing rotor.
- Install a new front bearing with an arbor press, using a length of tubing resting only on the inner race of the bearing (18 × 50 mm tubing).

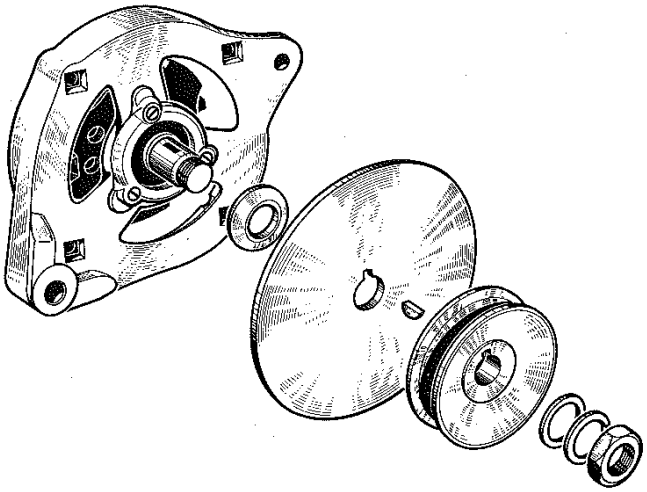

FRONT HOUSING RE-ASSEMBLY

- Place rotor into front housing.
- Install three bearing cover attachment screws, tighten, and lock.
- Engage spacer on shaft with small outer diameter facing pulley.
- Install :
  - key
  - fan
  - pulley
  - flat washer
  - "Grower" lockwasher
  - nut
- Torque to (29 ft.lbs) **4 m.kg.**

ELECTRICAL INSTALLATION

THREE PHASED ALTERNATOR S.E.V.

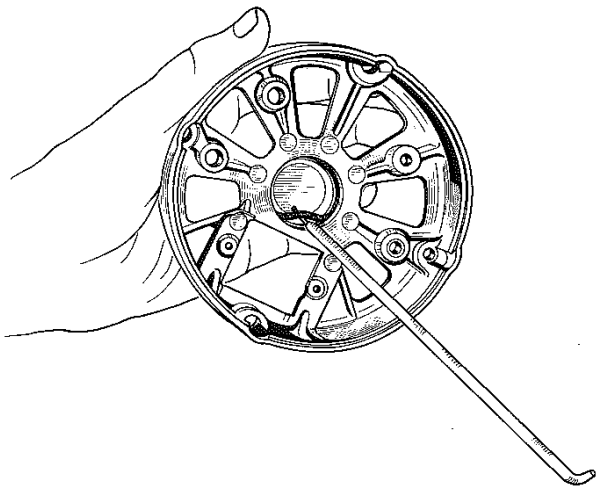

REAR HOUSING O-RING SEAL REPLACEMENT

- Remove O-Ring.
- Clean groove carefully.
- Clean up vent hole.
- Lubricate bore and groove
- Install new O-ring after smearing it with oil.

NOTE :

As from alternator number 121 953 a 2.8 mm thick seal is used to replace the former 3.2 mm seal.

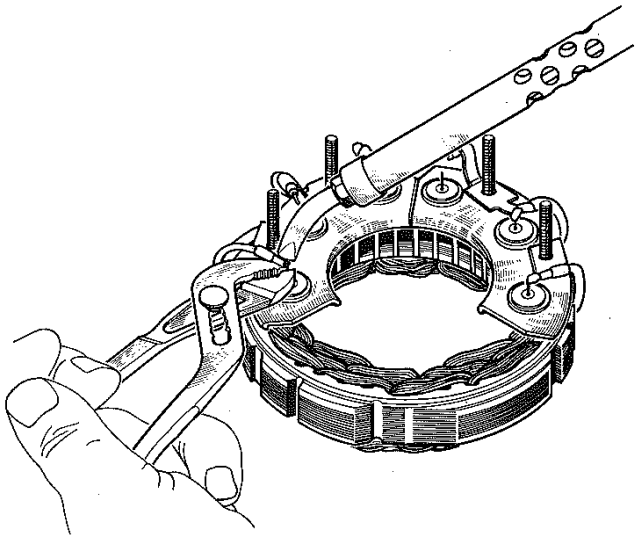

DIODES-TO-STATOR CONNECTION

Never reverse the diode holders on the stator.

- Carefully clean up the diode and stator output wires.
- Position the three wires on each diode holder, taking care to replace each wire in its original position.
- Solder each diode, taking care to clamp the pigtail of the diode with a pair of pliers to avoid heat damage ; use a high power, very hot soldering iron, as prescribed for dismantling.
- Connect all the other diodes as indicated above.

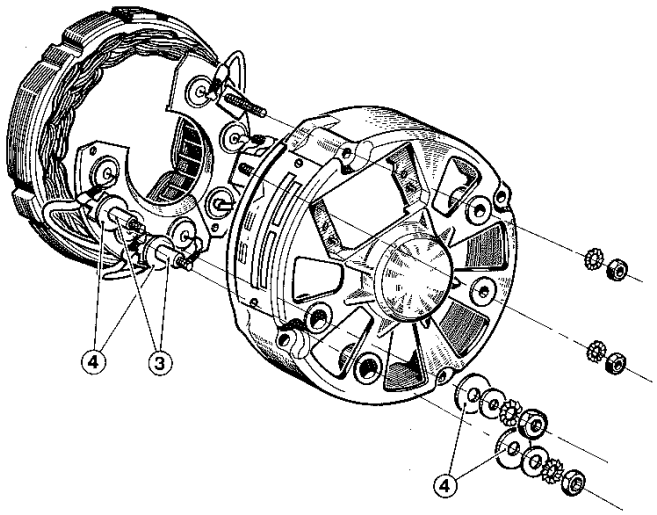

REAR HOUSING RE-ASSEMBLY

- Place two insulating washers **4** and two insulating tubes **3** on the positive diode-holder (red marks).
- Install the rear housing on the stator assembly.
- Place two insulating washers **4**, two flat washers, two lockwashers, and two nuts on the positive diode-holder terminals ; tighten the nuts.
- Install two lockwashers and nuts on the negative diode-holder (black marks).

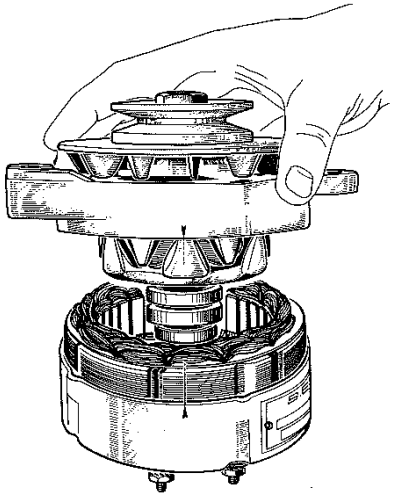

FRONT TO REAR HOUSING RE-ASSEMBLY

- Position rotor on rear and assemble.
- Align positioning marks drawn on the stator before dismantling.
- Install four assembling bolts through the front and rear housings and tighten.

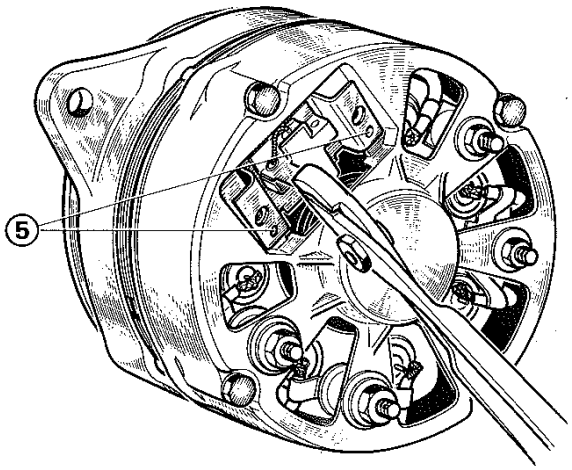

- Carefully engage brush-holder on both centering studs **5**, taking care not to damage the brush holder.
- Install insulating plate and two screws.
- Refit the alternator on the car.

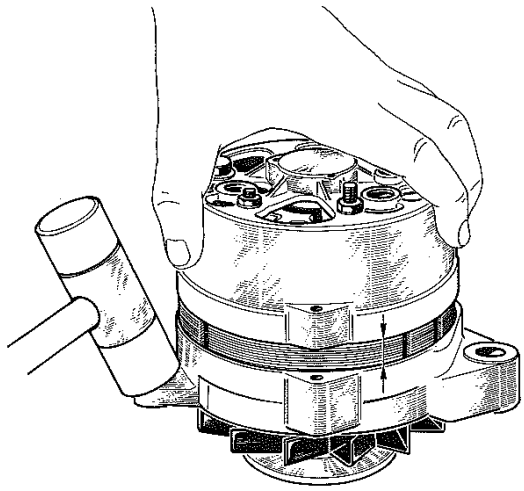

ALTERNATOR DISMANTLING

- Draw a reference mark on the stator and both front and rear housings.
- Remove the three assembling screws for the housings.
- Using a plastic mallet, tap gently the front housing to free it from the stator.

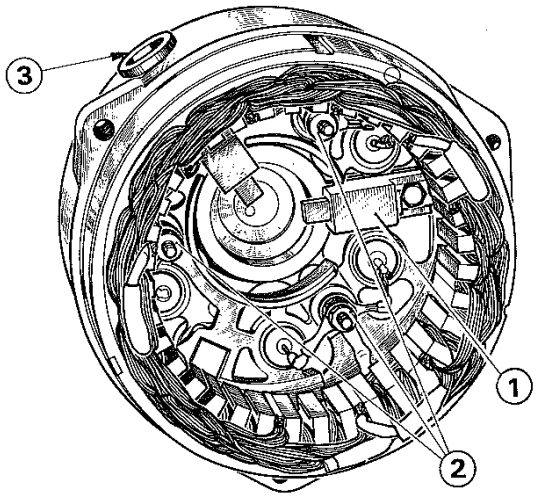

STATOR AND BRUSH-HOLDER REMOVAL

- Remove the three nuts and washers 2 attaching the stator to the relay terminals on the positive diode-holder.
- Remove : - Stator
  - Negative brush 1
  - Positive brush terminal protector 3 and brush-holder.

NOTE :

Insulating tube 5 should be removed if it disengages easily from its housing. Set aside insulating tube 4 and insulating washer 4 located between positive diode-holder and rear housing.

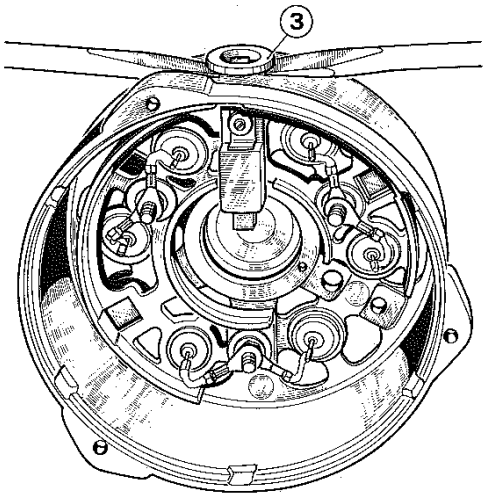

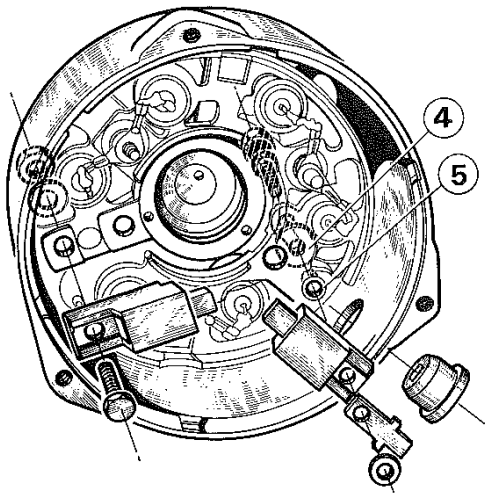

ELECTRICAL INSTALLATION

PARIS-RHONE THREE PHASED ALTERNATOR

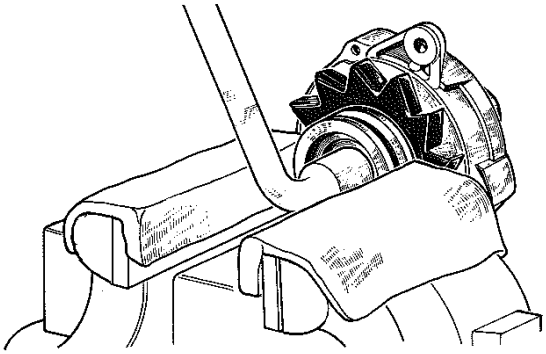

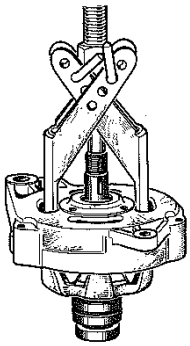

FRONT HOUSING DISMANTLING

Replacing one of the components requires dismantling of the front housing.

- Remove nut, lockwasher, pulley, fan, key, and spacer.
- Use a "FACOM U 35" puller or similar to remove the rotor from the front housing.

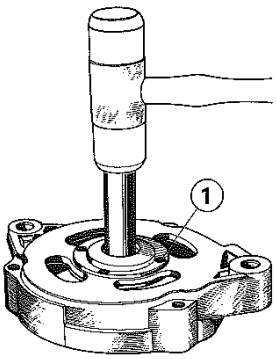

ROTOR BEARING REMOVAL

a - Front bearing

- Remove the four screws 1 from the front bearing cover.
- Drive out the bearing.

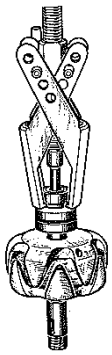

b - Rear bearing

Insert an 8 × 20 mm long section steel rod between the puller and the rotor axle end and remove the bearing with the puller.

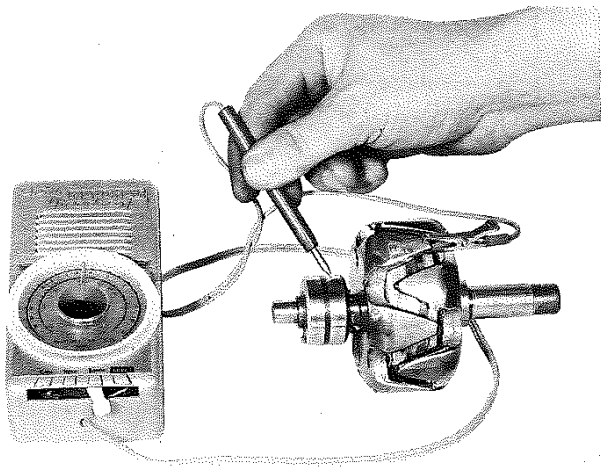

CHECKING AND TESTING

- A "MICROBAN" SEV MARCHAL tester should preferably be used, this equipment can be replaced by a standard ohmmeter. Never use a test lamp connected to the a.c. mains ; the operating voltage must never exceed 12 Volts.

Cleaning

All dismantled parts should be cleaned in trichlorethylene and dried with compressed air.

CHECKING THE ROTOR

Set the "MICROBAN" tester to "Sonde" (probe).

- Connect the alligator clip to the rotor prongs.
- Place the red probe in contact with one of the commutators.

No tone should be heard, or the tone should be barely audible.

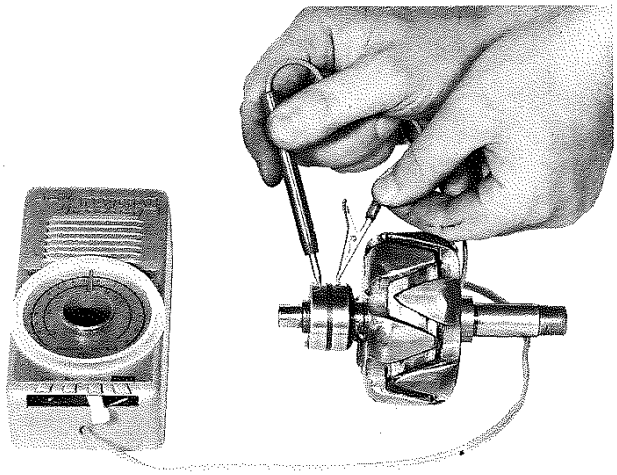

- Now place the alligator clip in contact with the other commutator.

A tone of maximum loudness should be heard, as when both probes of the "MICROBAN" are shorted.

The "MICROBAN" tester should be turned off after each check to avoid discharging the dry batteries.

Scratched commutators should be polished with fine-grain abrasive paper ; the rotor should be rotated during the polishing operation to avoid forming flats which would cause vertical oscillations of the brushes, and therefore result in "brush noise".

ELECTRICAL INSTALLATION

PARIS-RHONE THREE PHASED ALTERNATOR

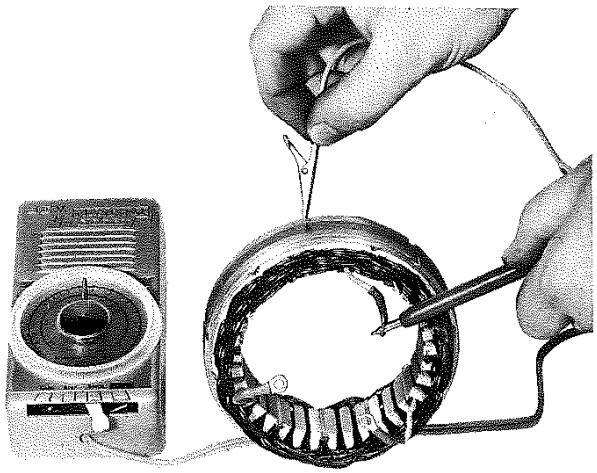

CHECKING THE STATOR

A few turns may be shorted inside the stator ; this fault causes overheating and can be easily detected by visual checking.

a - Insulation

Set "MICROBAN" tester to "Sonde" (probe)

- Put one of the probes on the stator iron core.
- Put the other probe in contact with each of the coil output leads **successively.**

No audible tone : The stator is not earthed.

Audible tone : The stator must be replaced.

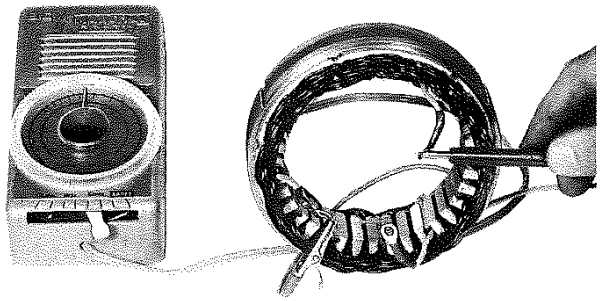

b - Continuity

- Connect one of the probes to one of the output leads.
- Put the other probe in contact with each output lead successively.

The tone should be heard **without any interruption,** even when the leads and connections are moved.

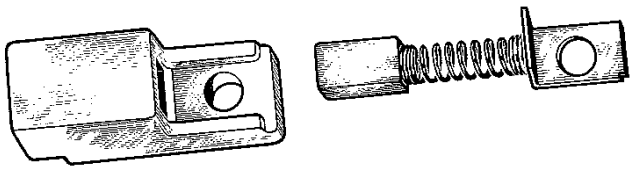

CHECKING THE BRUSHES

- Make sure the brushes slide freely in their holders. Replace the brushes if their length is less than 10 mm.

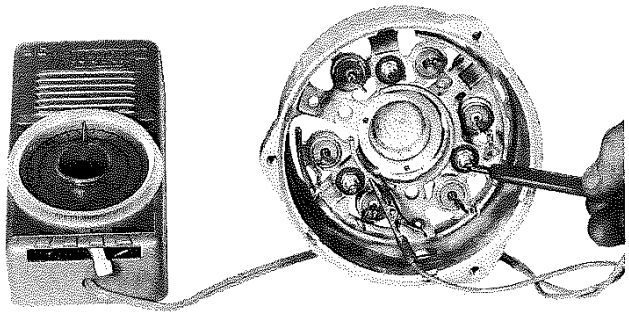

CHECKING THE RELAY TERMINALS FOR INSULATION

Set "MICROBAN" tester to "Sonde" (probe).

- Connect one of the probes to the + diode-holder.
- Put the other probe in contact with each terminal successively.

No tone should be heard ; if this is not the case, the insulation of the terminal is defective.

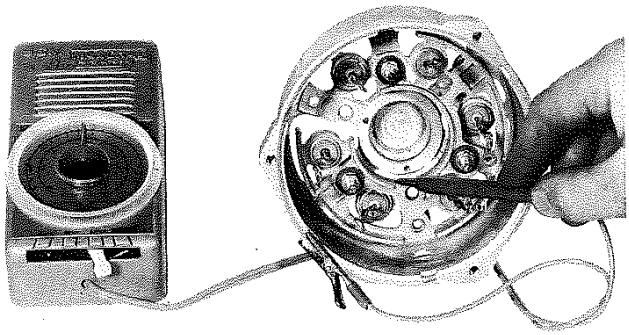

CHECKING THE + DIODE-HOLDER FOR INSULATION

Set "MICROBAN" tester to "Sonde" (probe).

- Connect the alligator clip to the rear housing .
- Put the probe in contact with the + diode-holder.

No tone should be heard ; if this is not the case, find out the reason why insulation is defective.

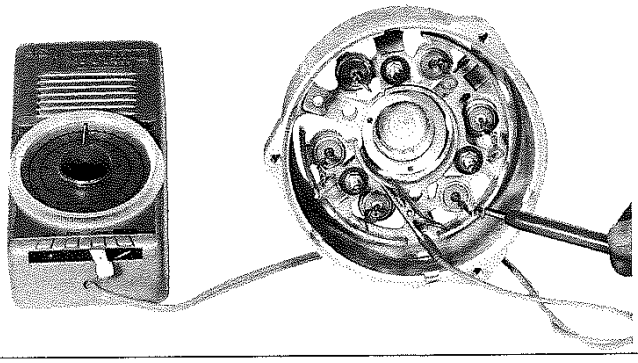

CHECKING THE DIODES

- Disconnect the diodes from the three relay terminals.

Set "MICROBAN" tester to "Sonde" (probe).

- Put one probe in contact with the pigtail of a diode, and the other probe in contact with the diode holder.
- Now reverse the connections.

A tone should be heard for one mode of connection only.

Tone heard in both cases : shorted diode

No tone : open diode.

- All six diodes should be checked successively as indicated above.

NOTE *: If one of the diodes is defective, the complete diode-holder assembly* ***must*** *be replaced for a positive diode, or* ***the rear housing*** *assembly for a negative diode (page 01 46, class 12).*

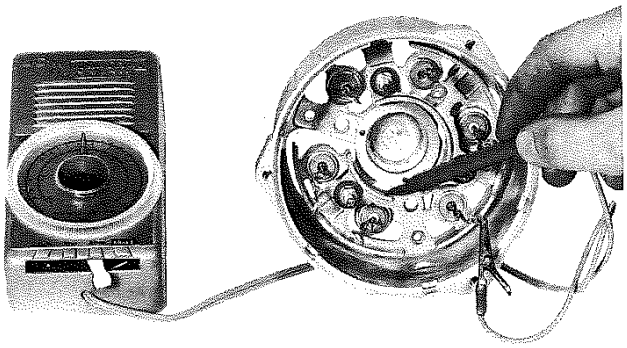

ELECTRICAL INSTALLATION

PARIS-RHONE THREE PHASED ALTERNATOR

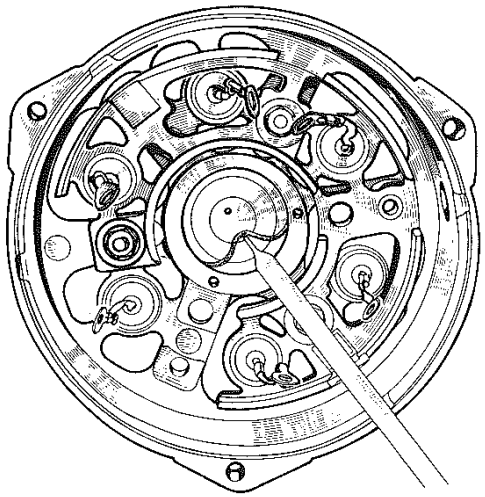

REAR HOUSING SEAL REPLACEMENT

- Remove the seal.
- Clean the groove carefully.
- Clean up the vent hole.
- Lubricate the bore and the groove.
- Install a new seal after smearing it with oil.

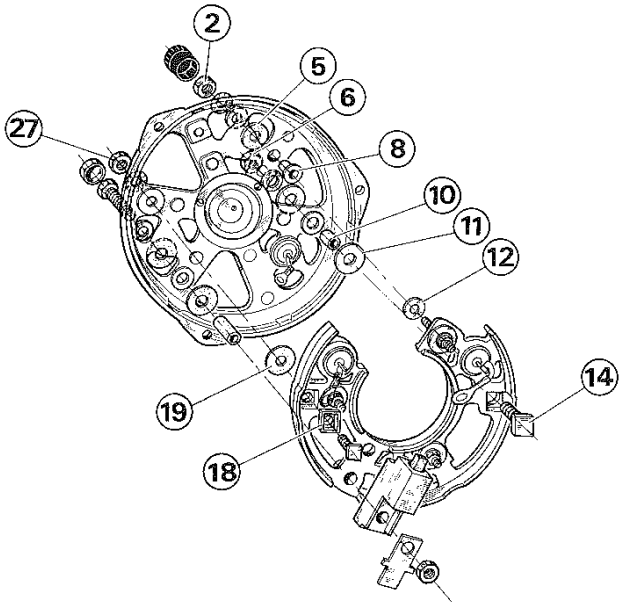

POSITIVE DIODE-HOLDER REMOVAL

Required only when :

- One of the + or – diodes is defective ;
- Insulation is defective in one of the relay terminals or for the positive diode-holder.
- Remove nut **6**, flat washer, and insulating washer from + terminal.
- Remove screw **14** and save insulating washer **11**, installed between diode-holder and insulating tube **10**.
- Remove nut **27** with lockwasher, remove screw, square insulator **18** and set aside insulating washer **19** installed between housing and diode-holder.
- If the + diode-holder incorporates a third attachment point, remove nut **2** with lockwasher, flat washer, insulating washer **5** and set aside insulating pilot **8** together with flat spacer **12**.

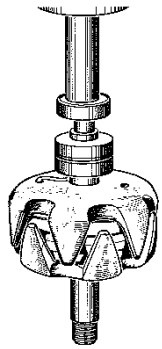

ALTERNATOR RE-ASSEMBLY

Re-assemble the alternator in the order given below after all parts have been cleaned and checked.

REAR BEARING INSTALLATION

- Install a new rear bearing with an arbor press, using a 12 mm dia. tubing resting only on the inner race of the bearing.

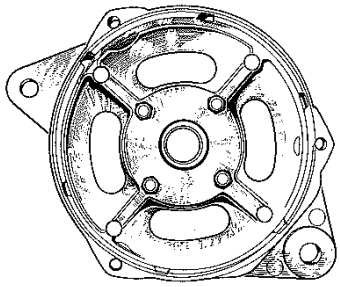

FRONT BEARING INSTALLATION

- Engage the new bearing in the front housing.
- Install the bearing cover and four attachment screws.

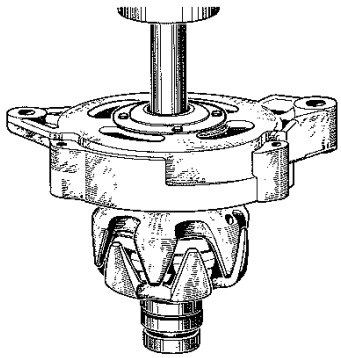

FRONT HOUSING ASSEMBLY

Install the front housing on the stator with an arbor press, using a length of 17 mm dia. tubing resting on the inner race of the bearings.

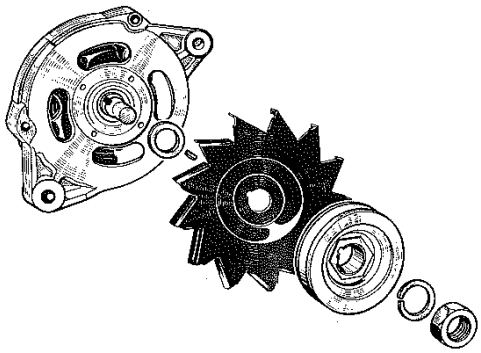

- Engage the spacer, key, fan, pulley, lock-washer and nut on the shaft.
- Torque to **29 ft.lbs** (4 m.kg).

ELECTRICAL INSTALLATION

PARIS-RHONE THREE PHASED ALTERNATOR

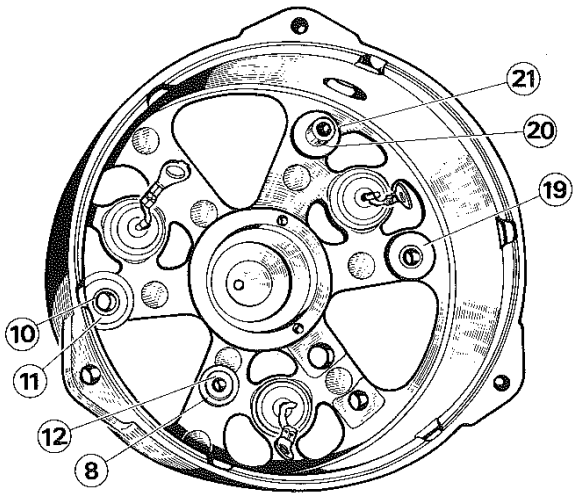

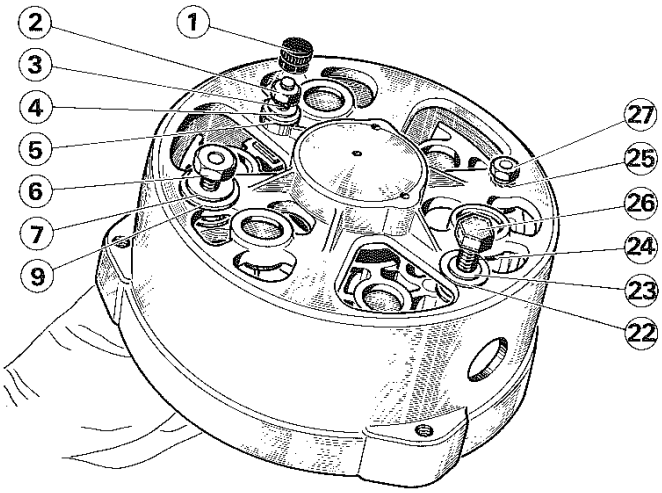

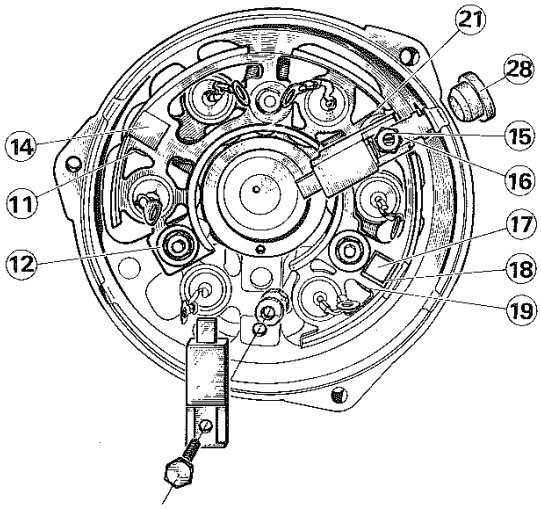

POSITIVE DIODE-HOLDER RE-ASSEMBLY

- **Install :**
  - Short insulating tube **10** and one 8 mm dia. insulating washer **11**
  - Insulating tube **20** and one 7 mm dia. insulating washer **21.**
  - One 7 mm dia. insulating washer **19.**
  - Insulating pilot **8** and flat steel spacer **12.**
  - Positive diode-holder.

- **Engage :**
  - Screw **14** on + terminal.
  - Screw **17** with square nylon insulator **18.**
  - Pivot the rear housing while maintaining in position the positive diode holder by the screws previously installed.

- **Place :**
  - 8 mm dia. insulating washer **9,** flat washer **7** and nut **6** on + terminal **14.**
  - Lockwasher **25** and nut **27** on screw **17.**
  - Insulating washer **5,** flat washer **4,** lockwasher **3** and nut **2.**
  - Flat washer **23,** insulating washer **22** on screw **24** ; engage screw in insulating tube **20.**

- **Install + brush-holder, field connector strip 16 and nut 15**

- **Check that the following parts have been installed before tightening nuts :**

  - Insulating washer **11** between + diode-holder and housing.
  - Insulating washer **21** between + diode-holder and housing,
  - Insulating washer **19** between the + diode-holder and the housing.
  - Steel spacer **12** between insulating pilot **8** and + diode-holder.

- **Tighten all nuts, making sure that insulating washers are centered.**

- Install cap **1** and **26** as well as excitation terminal strip protector **28.**

NOTE - The positive diode holder, + terminals and relay terminals should always be checked for proper insulation after re-assembly is completed (page 01 45, class 12).

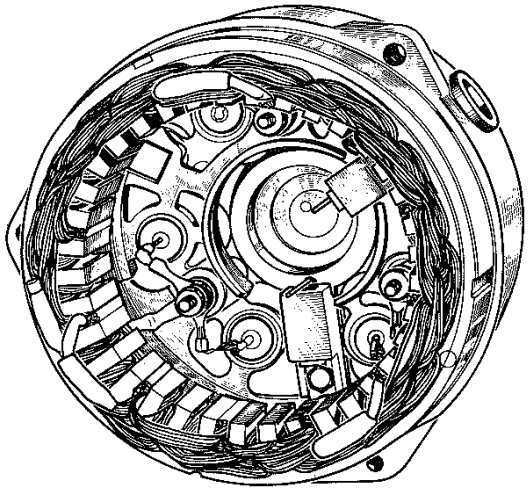

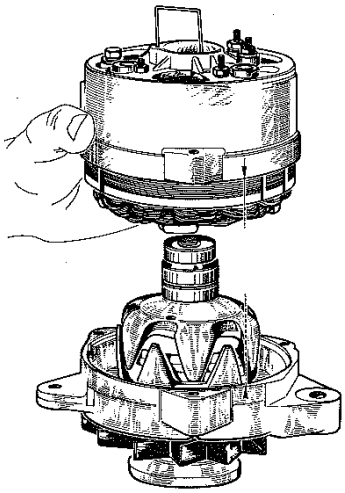

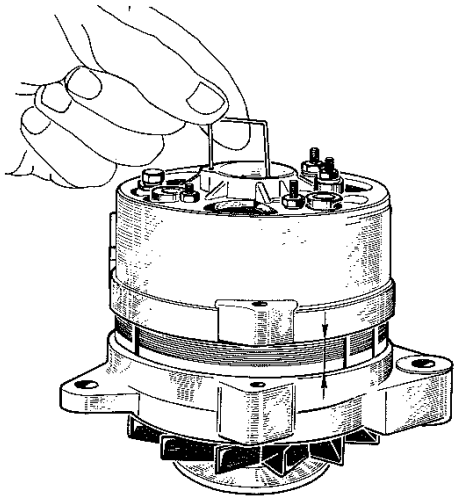

REAR HOUSING & STATOR RE-ASSEMBLY

- Position the negative brush on the rear housing.
- Connect each diode to the nearest relay terminal.
- Mate the reference marks on the stator and rear housing.
- Connect the three stator output leads to the three relay terminals.
- Install the lockwashers and nuts.
- Tighten the nuts, taking care to position the leads towards the periphery of the housing.

FRONT & REAR HOUSING RE-ASSEMBLY

- Insert the tool **0.1201** in the two openings in the rear housings
- Push back each brush successively to allow for placement of tool **0.1201.**
- Position the front housing vertically.
- Push down the rear housing on to the rear bearing, after mating the reference marks on the stator and front housing and make sure the brushes do not jam on the commutator.
- Remove tool **0.1201**
- Install and tighten three assembling screws together with their lockwashers.
- Refit the alternator in the car.

IDENTIFICATION - CHARACTERISTICS

Series starter with 4 poles
Electro-mechanical control by solenoid.

Type : Ducellier 6081
Paris-Rhône D 8E 57
Exterior diameter : 85 mm

	DUCELLIER	PARIS-RHONE
Test : 12 V battery capacity	60 AH	55 AH
- Hub torque at 1,000 r.p.m.	3.5 ft.lbs (0.5 m.kg)	3.5 ft.lbs (0.5 m.kg)
intensity absorbed	260 Amp.	220 Amp.
- Blocked torque	7.25 ft.lbs (1 m.kg)	9.5 ft.lbs (1.3 m.kg)
intensity absorbed	400 Amp.	400 Amp.
- Free speed	7,500 r.p.m.	Above 5,000 r.p.m.
intensity absorbed	12 Amp.	less the 50 Amp.
- Maximum power	1 hp/h	1 hp/h
intensity absorbed	220 Amp.	200 Amp.
Number of teeth on the pinion	9	
Direction of rotation (facing pinion)	Clockwise	

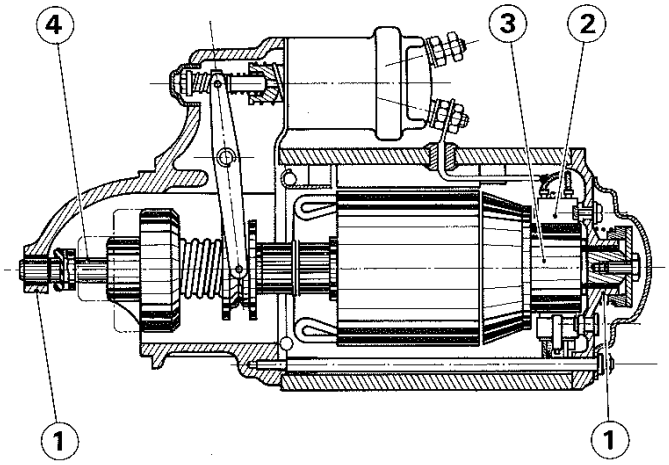

CHECKING

When reconditioning, check :

- the condition of the bush 1
- the free movement and condition of the brushes 2 (replace if they are less than 8 mm. long).
- the surface condition and out of round of the commutator 3 (0.05 mm. maximum).
- Clean between the commutator strips to a depth of 0.5 mm.
- Grease the splines 4 before re-assembly

ELECTRICAL EQUIPMENT

STARTER MOTORS

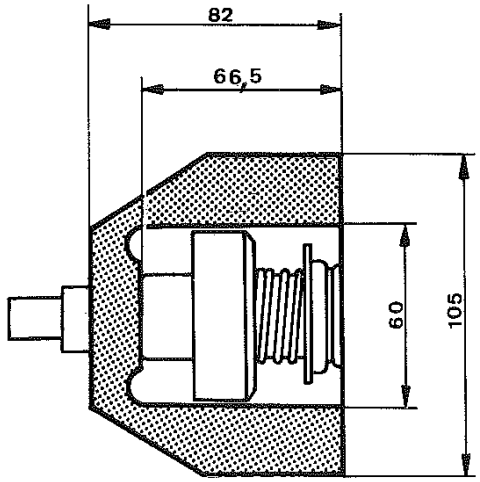

TOOLS TO BE USED

This tool is to be made in the workshop.

- Gauge for checking the Ducellier starter.

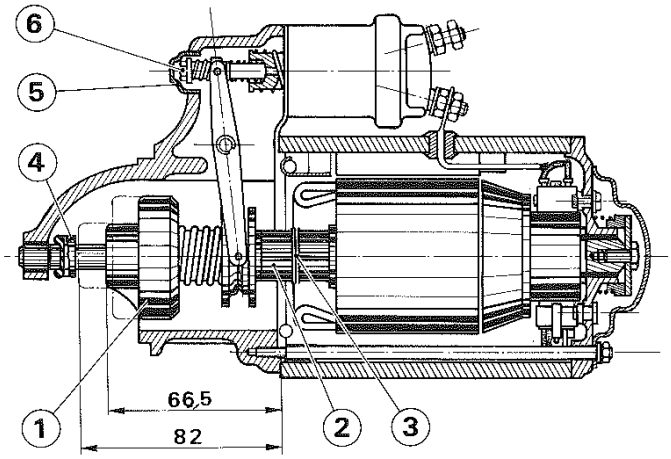

ADJUSTMENTS

DUCELLIER

1) Bendix

- Backwards movement of pinion **1** : 66.5 mm
- Add or remove washers **3** behind spacer **2**
- Pinion travel : 82 mm
- Screw in or out stop nut **4** and install pin.

The gauge should be used for the two above adjustments.

2) Solenoid

The following adjustment is used to take up longitudinal play of the bendix in the at rest position.

- Remove plug **5**
- Slacken adjusting nut **6** progressively until all the longitudinal play has disappeared.
- Unscrew one quarter of a turn.
- Re-install plug.

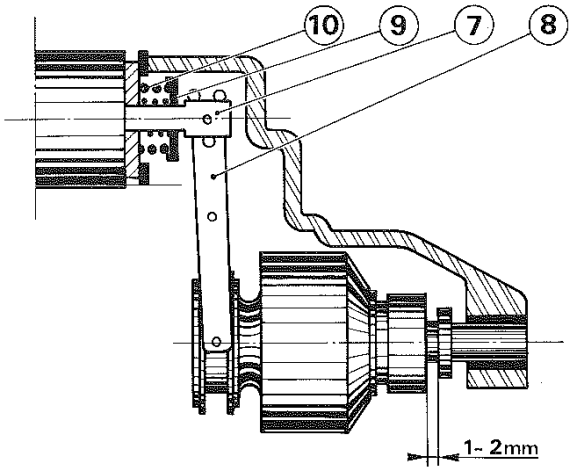

PARIS-RHONE

Adjusting clearance between front stop and drive pinion in actuated position.

- Operate switch under reduced voltage (10 V.) by energizing the two small terminals ; drive then comes up to actuated position, but does not rotate.
- Push armature and drive backwards to take up the clearances.
- Check the clearance between pinion and front stop : 1-2 mm.
- Adjust if required by adjusting yoke **7** controlling fork **8**, after depressing backing cup **9** for return spring of plunger **10**.

NOTE *- The solenoid should not remain energized for more than a few seconds to avoid deterioration of the windings.*

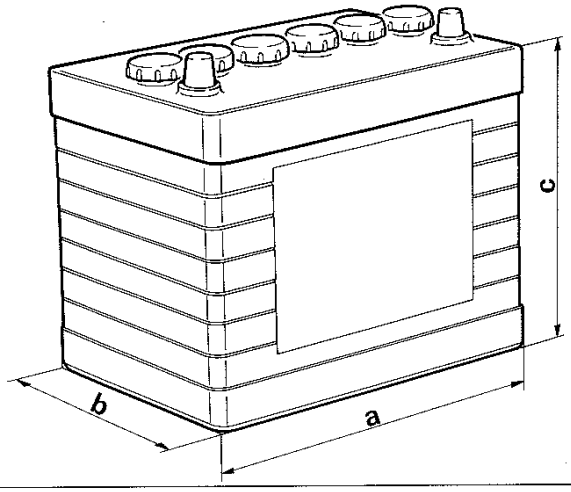

CHARACTERISTICS

Capacity	Dimensions in mm			Make	Ref.
	a	b	c		
55 AH	250	170	205	Tudor U.S.L. Steco	M10AS 6411 12RF9G

- Installation : Negative earth
- Connections: Arelco protected terminals.

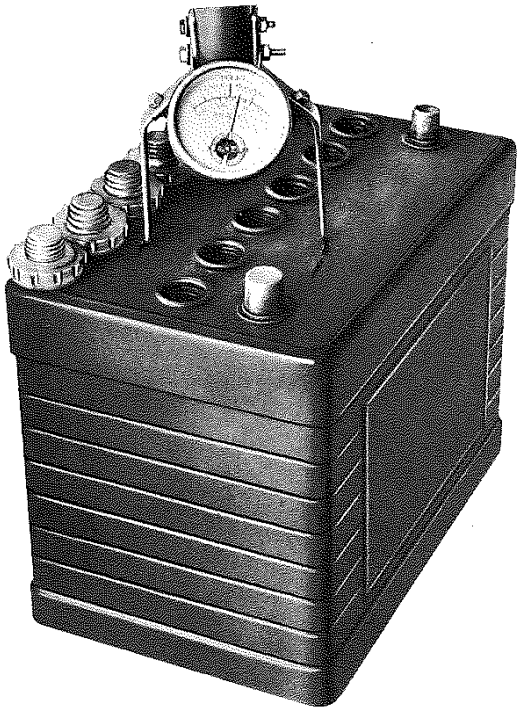

CHECKING

The level of the electrolite must be about 10 mm (1/2 inch) above the top of the plates. Connect a battery tester across each set of plates. Connect a battery tester across each set of plates successively.

1° - Tester needle must reach the ''Normal'' sector on the tester dial ; if not, the battery requires charging.

2° - **The voltage drop evidenced by the tester** after it has been connected across each cell for at least 15 seconds **must not differ appreciably for any two cells.**

If a much faster voltage drop is experienced for one or two cells in the battery, this indicates a short or an open circuit in the corresponding cells and the battery must be replaced.

ELECTRICAL INSTALLATION

BATTERY

MAINTENANCE

a - Cleanliness and protection of the terminals

The battery must be kept dry and clean. If the acid has overflowed wash the battery with the usual solution of water and detergent.

The terminals should be washed with warm water. Then bare the terminals and the contacts with a stiff wire brush.

Smear the inside of the Arelco protectors with grease.

b - Electrolite level

The level must be maintained at $\frac{1}{2}$'' (10 mm) above the plates by adding distilled water (never add acid unless it has been accidentally drained).

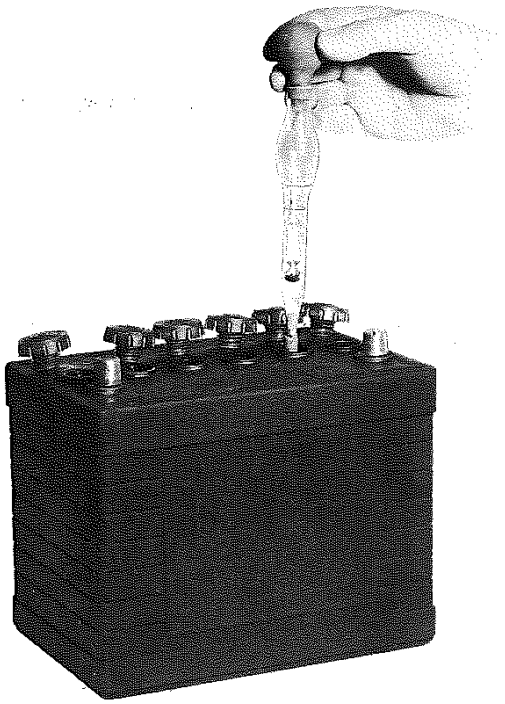

Specific weight of the electrolite at 15° C.

Density of the sulphuric acid : 1.84

Weight in Kg	Baumé Degrees
0.01	1°
1.04	5.5°
1.20	24°
1.24	28°
1.25	29°
1.26	30°
1.31	34°

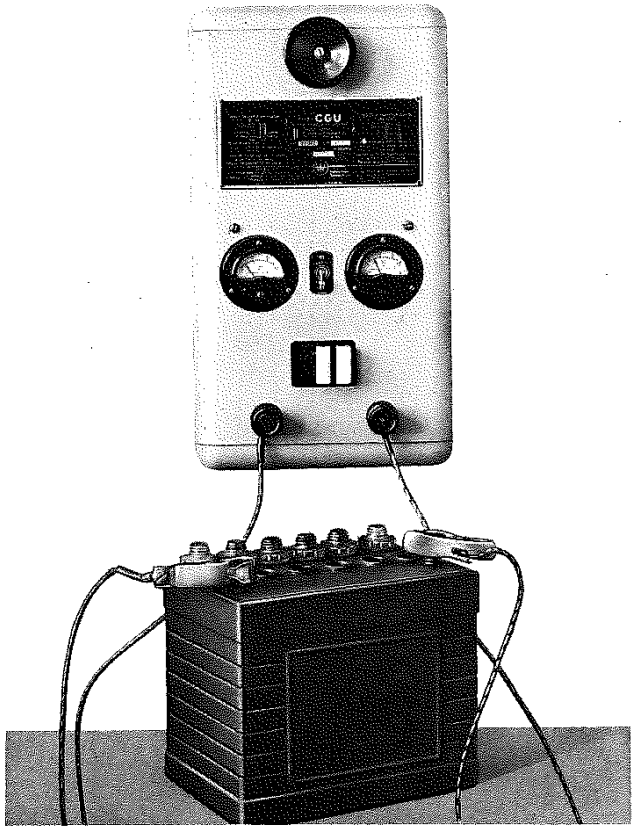

c - Recharging

If the density is below 27° B the battery should be recharged.

A density of 31 to 32° B at 15° C (constant during 2 hours) corresponds to full charge.

The battery must be recharged slowly at 1/10 or 1/20 of its capacity.

If the density is below 26 to 27° B, a short charging under heavy current can be carried out.

Nonetheless as soon as the density reaches 28° **the heavy current charging is harmful because :**

1 - the effectiveness of the charge diminishes as the voltage increases.

2 - the loss of water by electrolysis is high.

3 - the discharge of gas in the heart of the active components is high and causes the collapse of these components.

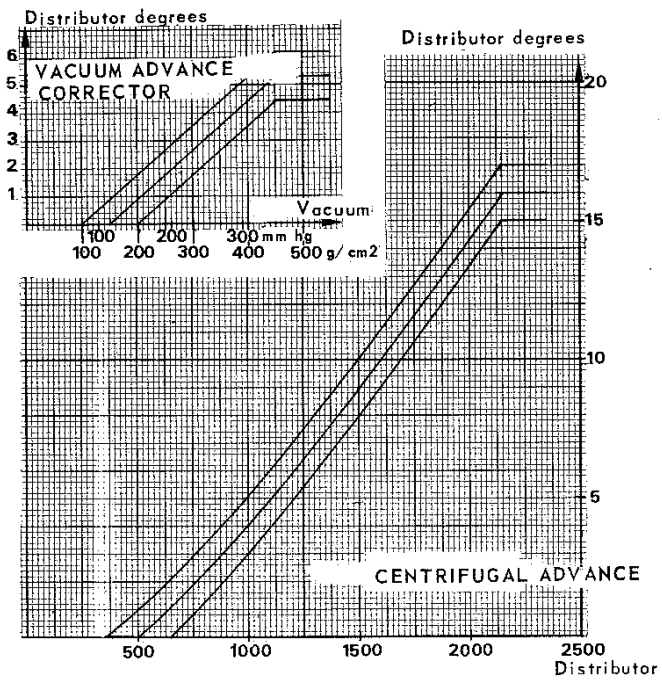

DISTRIBUTOR

1st Fitting

Up to serial number :

404 (TW)	- 5 059 198	**404 L (TH)**	- 4 861 692
404 (TH)	- 5 172 938	**404 U6**	- 4 747 721
404 J	- 4 535 724	**404 L Break**	- 4 861 962
404 L (TW)	- 4 895 262	**404 C**	- 4 498 566

Make : SEV or DUCELLIER
Type : XC1

Adjustment :

- Contact breaker gap : 0.015'' (0.40 mm)
- Dwell angle : 57° ± 2°
- Firing order : 1-3-4-2

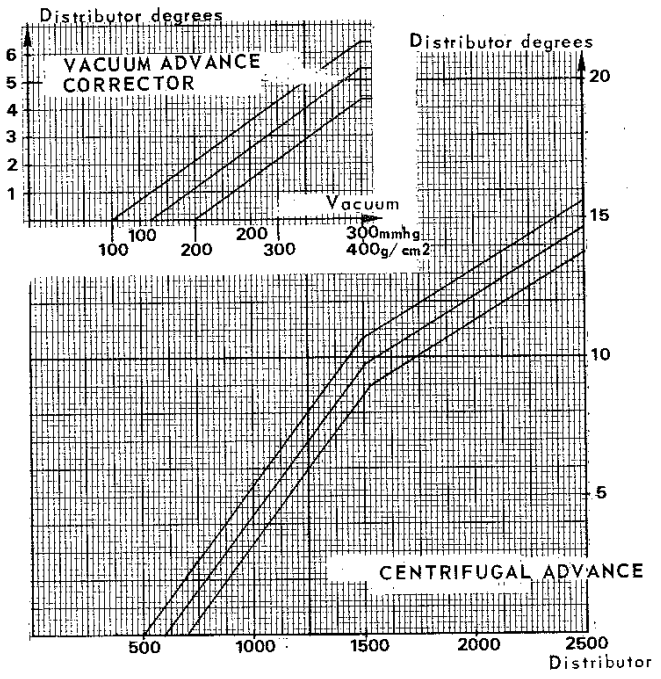

2nd Fitting

As from serial number :

404 (TW)	- 5 059 199	**404 L (TH)**	- 4 861 693
404 (TH)	- 5 172 939	**404 U6**	- 4 747 722
404 J	- 4 535 725	**404 Break**	- 4 861 963
404 L (TW)	- 4 895 263	**404 C**	- 4 498 567

Since beginning of series :

404/8	- 6 900 001
404 U8	- 7 010 001
404 U10	- 7 060 001

Make : SEV or DUCELLIER
Type : M. 48

Characteristics :

Same as previous model.

ELECTRICAL INSTALLATION
IGNITION SYSTEM

RECOMMENDED TOOLS

Description	Make
Test bench for distributors	Souriau 1263

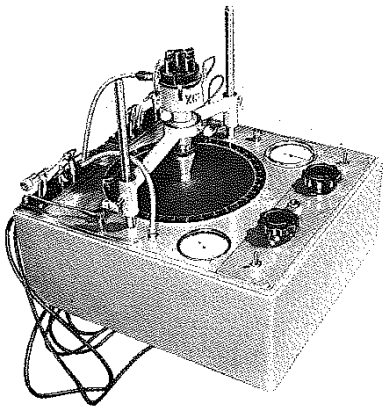

CHECKING THE DISTRIBUTOR

Contact breaker

Before carrying out a thorough check of the distributor :

- Check the condition of the points
- Check the bearing of the heel on the cam.

Replace these parts if necessary.

- Set the gap to 0.015'' (0.40 mm)
- Install the distributor on the test bench.

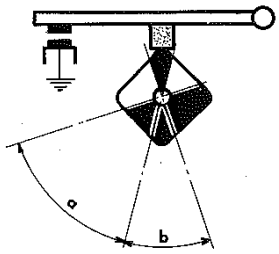

a : 57° dwell angle
b : 33° angle of opening

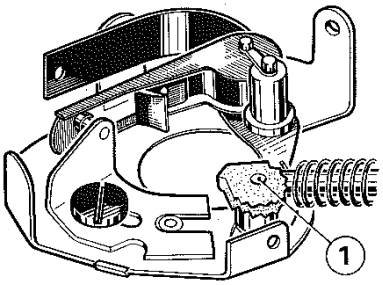

Checking on the bench

- Check the dwell angle (57 ± 2°) and adjust it, if necessary, by acting on the breaker gap.

For Ducellier distributors only :

- Check the dwell angle :

1. without vacuum
2. with maximum vacuum.

The dwell angle must be identical in both cases. If not correct it by rotating the eccentric **1**.

Then check the centrifugal and vacuum advance curves.

The readings must be within the range of the predetermined curves (page 04 01, class 12).

RECOMMENDED TOOLS

Description	Make
Microban	SEV Marchal

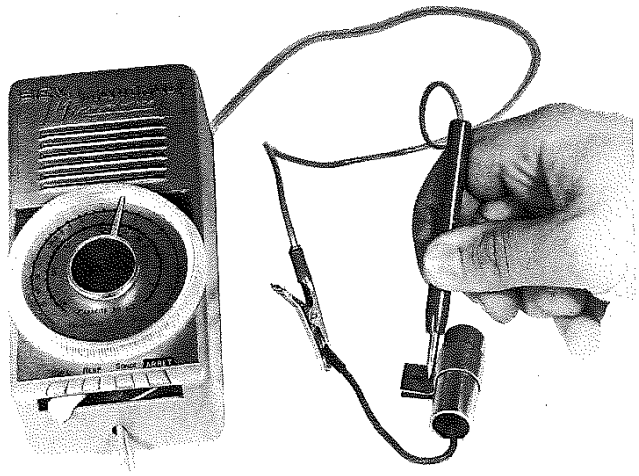

CHECKING THE CONDENSER

- The capacity of the ignition condenser must be between 20 at 30 μF.
- Use the Microban or a standard capacity meter.
- Switch on "**capa**"

Condenser removed

- clip the "crocodile" to the condensor lead
- earth the feeler

By rotating the dial of the Microban stop the buzz.

Read the capacity indicated.

On the car :

- disconnect lead **3** from the coil
- open the contact breaker points
- clip the "crocodile" to lead **3**
- earth the feeler.

If the value differs from the one given replace the condenser (poor insulation, broken lead).

ELECTRICAL INSTALLATION

SETTING THE DISTRIBUTOR

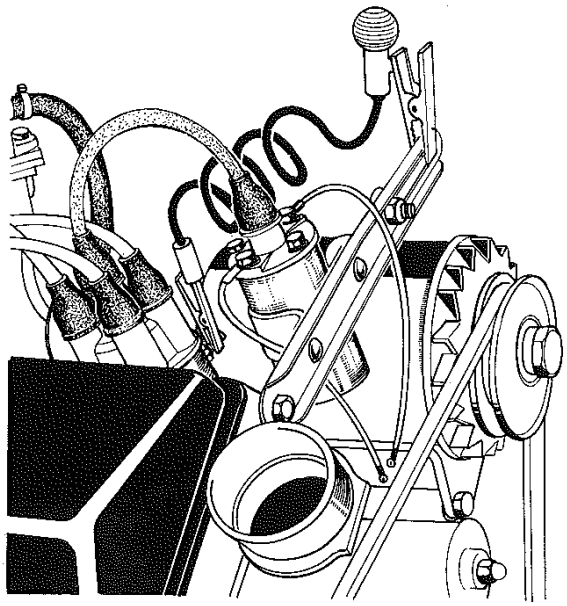

DISTRIBUTOR SETTING

Initial Ignition Advance :

- 11° at the flywheel or 0.85 mm B.T.D.C. on the piston.

Procedure

- Engage the adjusted distributor in its support.
- Position the vacuum pick up between the carburettor and the petrol pump outlet.
- Turn the rotor to engage the drive blade in its slot.
- Connect the lead **3** to the distributor terminal.
- Connect a test bulb between the distributor terminal and earth.

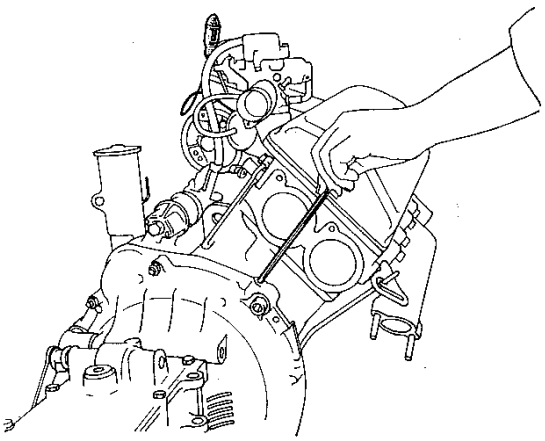

- Insert an 8 mm diameter rod in the hole in the clutch housing.
- Turn the engine over slowly in its normal direction of rotation.
- When n° **1** or n° **4** piston reaches the ignition point the rod will engage in the flywheel.
- Switch on the ignition.
- Turn the distributor fully to the right (direction of rotation).
- Turn it backwards (to the left) until the bulb lights up.
- Tighten the support clamp.
- **Check the ignition advance.**

At the precise moment that the rod engages in the flywheel the bulb should light up. If not, reset the ignition timing.

- Withdraw the rod.
- Refit the distributor head and H.T. leads.

NOTE *- When the distributor is correctly positioned, the lead for n° 1 cylinder must be next to the vacuum unit.*

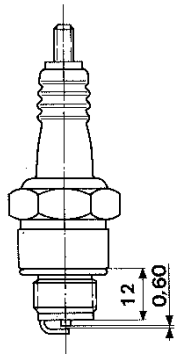

SPARK PLUGS

1st Fitting

SHORT REACH PLUGS

404 Saloons and Family cars
3 bearing crankshaft
Marchal : 36 P
AC : 44 F

404 U6
3 bearing crankshaft
Marchal : 35 P
AC : 44 F

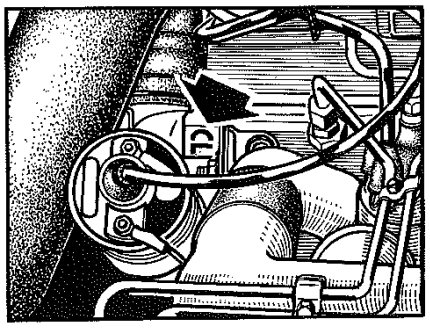

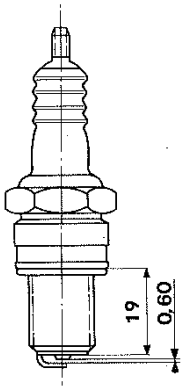

2nd Fitting

LONG REACH PLUGS

All 404 Models
5 bearing crankshaft (XB5 and XC5)

As from serial number :

404	- 4.400.001	**404 L**	- 4.838.001
404 J	- 4.528.001	**404 U6**	- 4.720.001
404 C	- 4.497.001		

From the beginning of series :

404/8 - 6.900.001
404 U8 - 7.010.001
404 U10 - 7.060.001

The cylinder heads are marked CL on the front L.H. boss.
Marchal : 36 HS
AC : P 44 XL

All 404/9 models
XC6 engine (compression ratio : 8.3 : 1)

As from number :

404 (TW)	- 5 075 001	**404 L (TH)**	- 4 884 001
404 (TH)	- 5 311 001	**404 L (TW)**	- 4 940 001
404 C	- 4 499 501		

Marchal : 35 HS
AC : 44 XL
Champion : N 9 Y

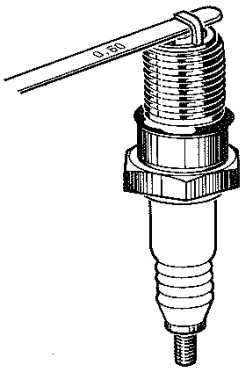

Adjustment

Check the electrode gap every 3,000 miles (5,000 km).

- Clearance (0.60 mm).

Tightening torque : 16 ft.lbs (2.25 m.kg).

ELECTRICAL INSTALLATION

SETTING THE DISTRIBUTOR

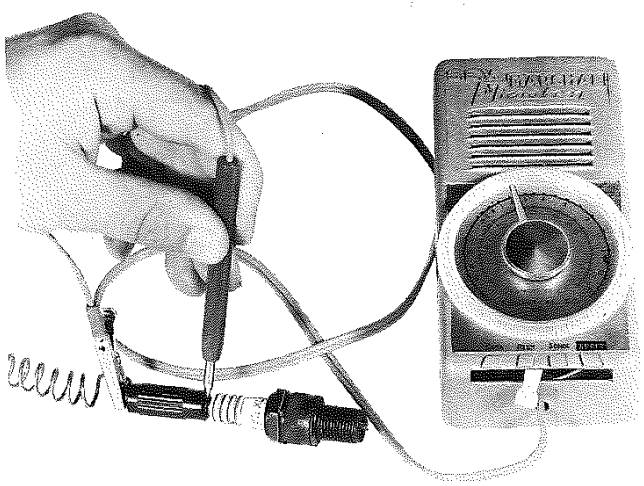

SUPPRESSING HARNESS

Make : Floquet or Arelco
H.T. Lead characteristics :

Approximate resistance		Length in mm.	
Coil to Distributor	64Ω + 6,800Ω	370	
Distributor n° 1 Cyl.	270Ω	770	+ 15
» n° 2 »	200Ω	590	− 0
» n° 3 »	170Ω	510	
» n° 4 »	100Ω	320	

An additional suppressor of approximately 6,800Ω is placed between the plug of each cylinder and its contact spring.

Influence of the resistance :

Too low a resistance will cause radio interference. Too high a resistance will cause misfiring and starting difficulties.

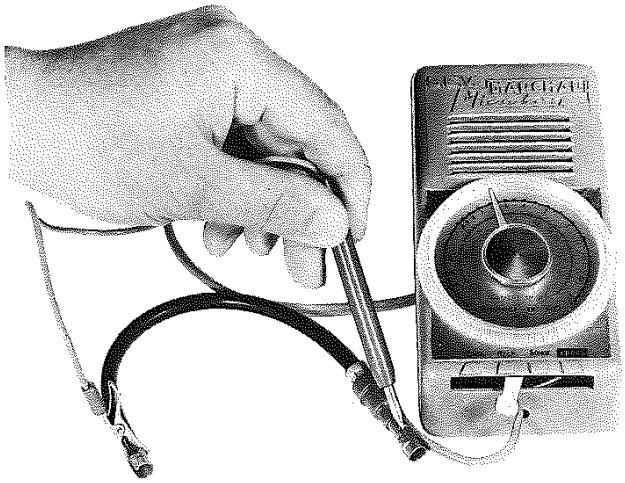

CHECKING THE SUPPRESSING RESISTANCE

The values can vary from car to car, but it is important that they be more or less the same on all the cylinders of one engine.

Use a Microban or a standard ohmmeter : (lever on Res.)

- Connect both ends of the H.T. lead to the Microban.
- By rotating the dial, find the point where the buzz stops and read the resistance indicated.
- Repeat this operation for all 4 plug leads and the coil HT lead.

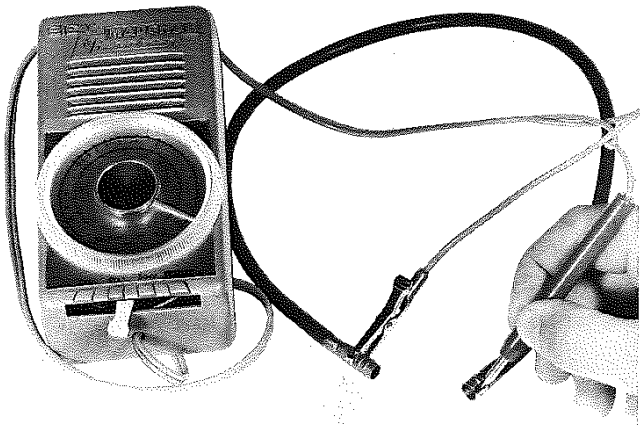

CIBIE

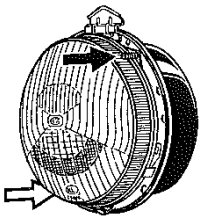

MARCHAL

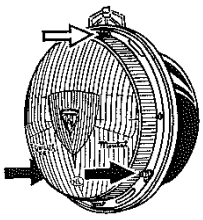

DUCELLIER

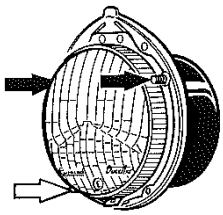

HEADLAMPS

Adjusting

The use of a checking apparatus is essential.

- Remove the headlamp lens by pulling it outwards by the lower holes.

On 404 Saloons :

- Vertical setting : use the screws indicated by a white arrow.
- Horizontal setting : use the screw or screws indicated by a black arrow.

CIBIE

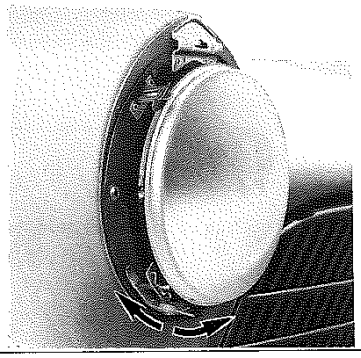

On 404 Family Cars and Station Wagons :

Before adjusting as indicated above :

- Car empty :
  Place the headlamps in the "raised" position
- Car laden :
  Place the headlamps in the "lowered" position

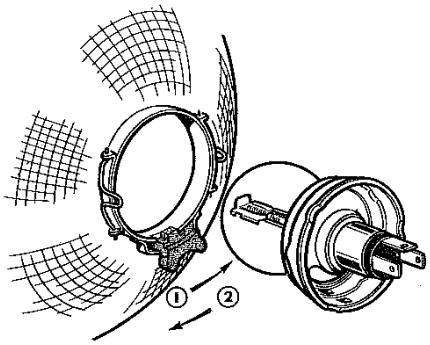

Changing from L.H. to R.H. or R.H. to L.H. traffic

To enable the changing of the dipped beam direction, the guide notch on the bulb can be positioned :

- For L.H. traffic : to the right 1
- For R.H. traffic : to the left 2

Caution :

Do not touch the bulb with bare hands (risk of grease, etc...).

ELECTRICAL INSTALLATION

LIGHTING - SIGNALLING

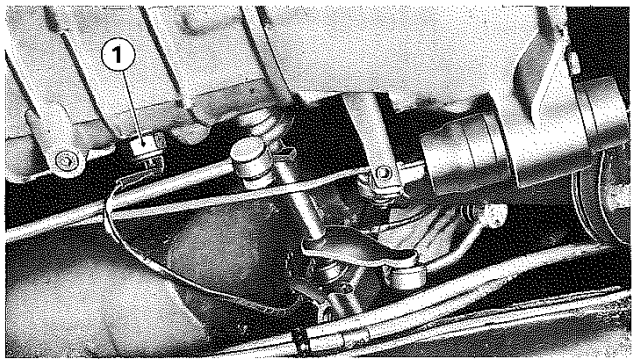

REVERSE LIGHTS

Switch :

On the "Super Luxe" Saloons equipped with a BA7 Gearbox, the switch **1** is mounted in the main housing.

On the other models, the switch hole is blocked with a threaded plug.

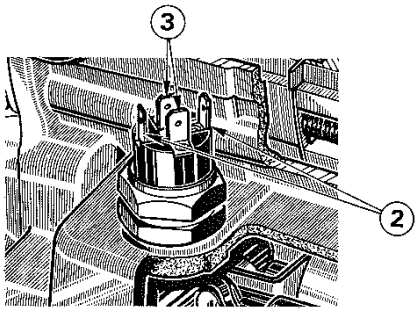

On the "Super Luxe" Saloons equipped with ZF Automatic transmissions, the switch is the one used for prevention of starting the engine when on positions "R" "D" and "E".

The switch has four terminals :

- two close together **(3)** for the locking.
- two further apart **(2)** for the reverse light.

Adaptation

The equipment of the "Super Luxe" Saloons can be fitted to the other models equipped with a BA7 or ZF gearbox on condition that :

-The rear lights incorporating a reverse light (P.N. 6343.28) are fitted,
-The reverse light switch (P.N. 2257.06) is fitted to the BA7 gearbox.
-The wiring is realised as shown in the diagram below :

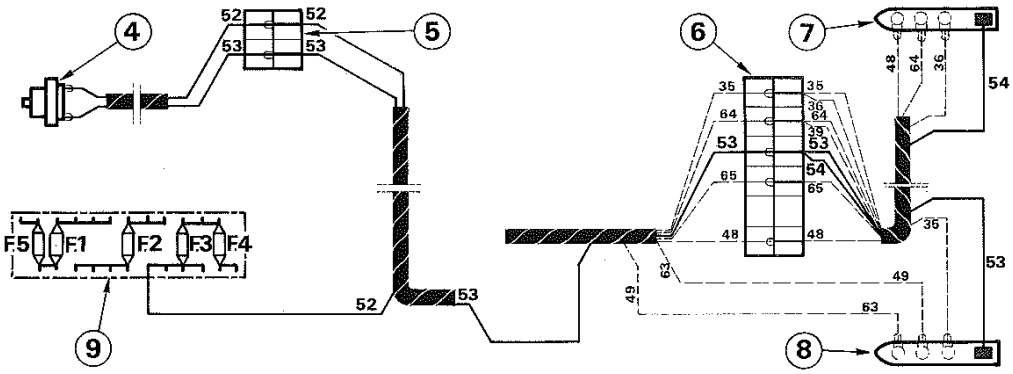

4 - Reverse light switch
5 - 6 - Connectors

7 - 8 - Rear lights
9 - Fuses

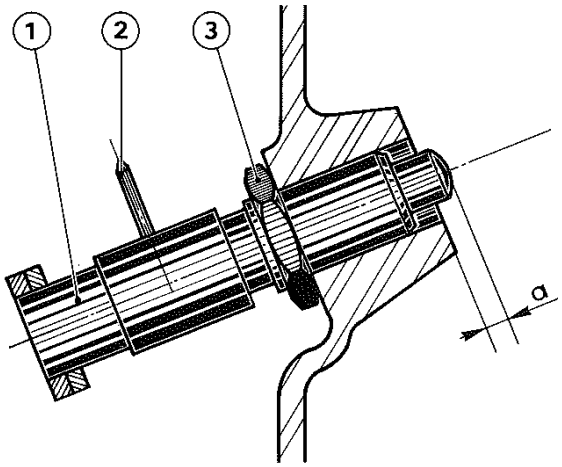

STOP LIGHT SWITCH

Only the mechanical stop light switch, fitted since adoption of the BA7 gearbox, is adjustable.

Adjustment

- Screw the switch **1** into the pedal support to obtain a protrusion of the plunger **(a)** of :
  - 2 mm ± 0.5 mm - 404 with TW or TH brakes
  - 9 mm ± 0.5 mm - 404/8
  - 6.5 mm ± 0.5 mm - 404 U.S.A. models.
- Position the terminals **2** upwards to facilitate the wiring.
- Tighten the lock nut **3.**
- Connect up the wires.

JAEGER panel

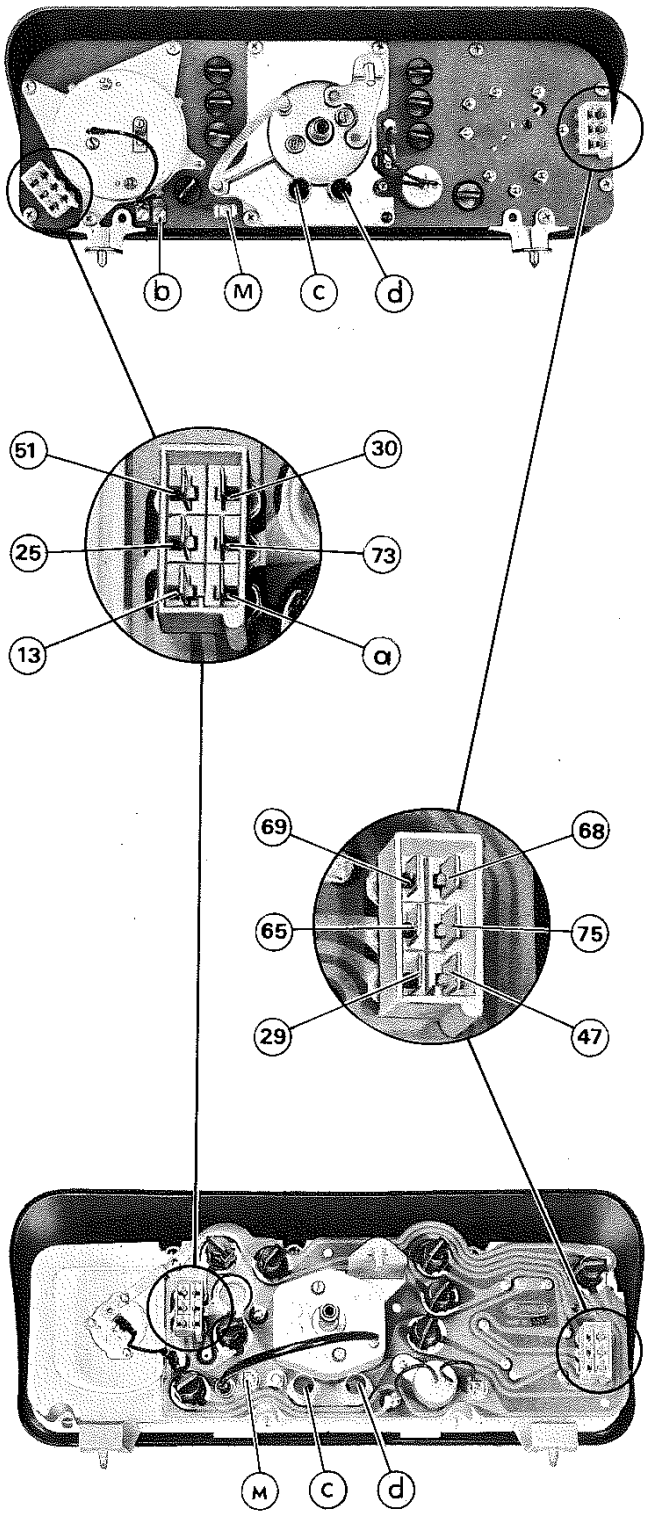

PRINTED CIRCUIT

Since July, 1966, the instrument panels with three dials, fitted to 404 models, have a printed circuit.

Precautions :

- before all intervention, disconnect the battery.
- all intervention requires removal of the panel.

It should only be dismantled on a work bench.

Checking :

The continuity of the circuits must be checked :

- either with a **12 V test bulb**
- or with the SEV Marchal Microban.

Never provoke a short circuit to check the wiring or an instrument. Even if accidental, this will cause deterioration of the printed circuit.

Correcting up of the 404 instrument panel

51 - Direction indicator warning light
25 - Instrument panel light
13 - + permanent feed (clock)
30 - Oil pressure warning light
73 - Four way flasher (U.S.A.)
a - Unused terminal
69 - Brake assistance warning light
65 - Fuel gauge
29 - Feed from the ignition switch
68 - Main beam warning light
75 - Choke warning light (404 carburettor) fuel pressure warning light (404 injection)
47 - Water temperature gauge
M - Earth lead terminal
b - Unused connector corresponding with the terminal (a).
c and d - Additional positions for the adaptation of warning lights for accessories.

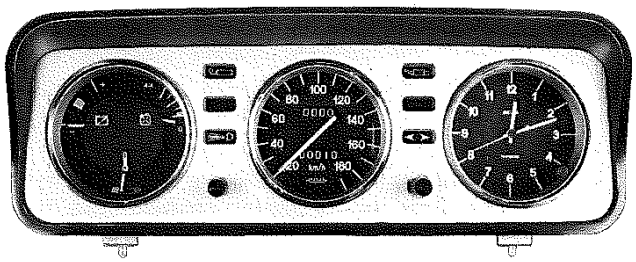

THERMAL VOLTMETER

Characteristics :

Make : Jaeger or E.D.
Intensity absorbed : 0.15 Amp.
Operating delay : 40 to 60 seconds.

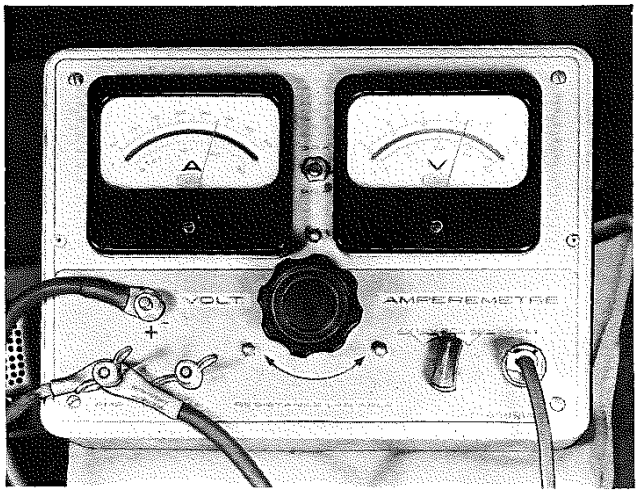

Checking :

The voltmeter only indicates the battery charge and not the generator output.

Check that the voltage reading on the checking voltmeter corresponds with that indicated on the thermal voltmeter. The approximate values are given below.

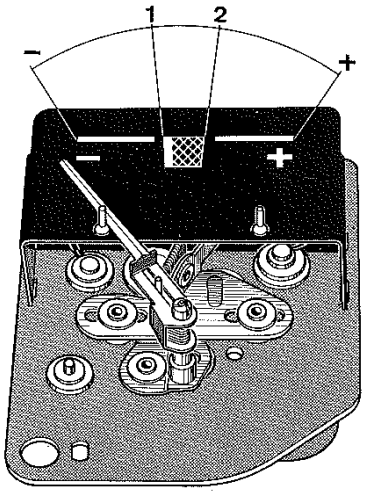

Voltage indicated at + 20° C - ≠ 9 V
1 ≠ 12 V
2 ≠ 13 V
+ ≠ 15 V

If this reading is not obtained :

- the voltmeter connections are poor.

- the thermal voltmeter is to be replaced.

ELECTRICAL INSTALLATION

INSTRUMENT PANEL

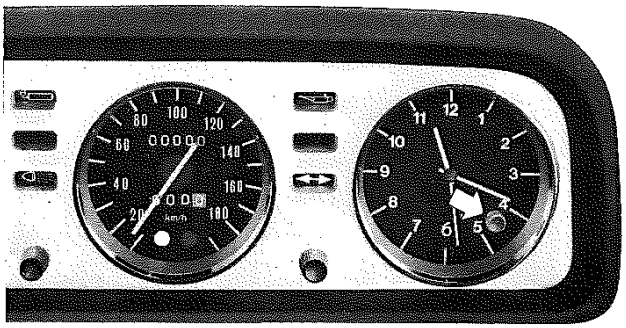

CLOCK

The electric clock is under permanent feed from the battery.

If the battery has been disconnected, **the clock must be reset to start it again.**

After resetting, make sure that the control comes back to its initial position and turns freely.

Consumption of the clock : 5 milliamps/hour.

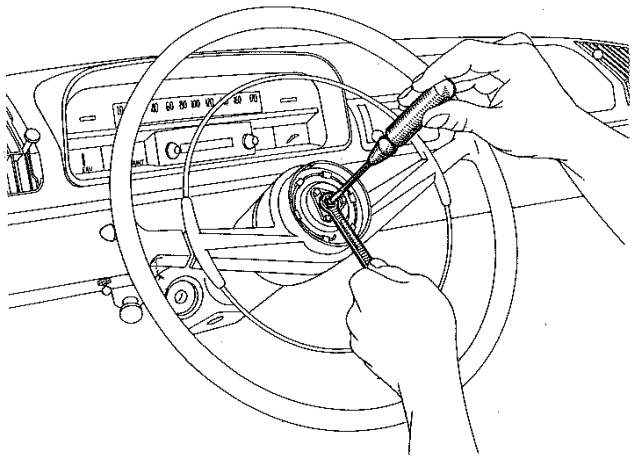

HORNS

The horn ring operates the horns by pressure on any point.

ADJUSTMENT

1st fitting

From beginning of series

- Remove the centre piece,
- Slacken the lock nut and tighten the centre screw until contact of the "town" horn.
- Slacken the screw at least one turn and tighten the lock nut.
- Refit the centre piece.

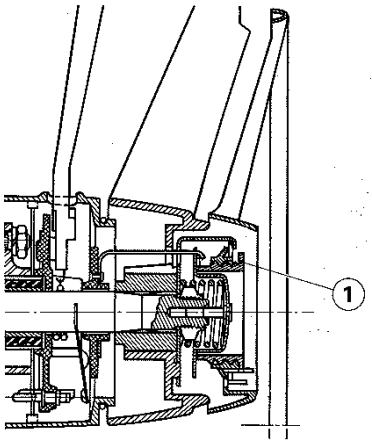

2nd fitting

As from July 1962

- Remove the centre piece.
- Screw in the adjuster ring **1** until contact of the "town" horn.
- Screw the adjuster ring out approximately one half turn.
- Refit the centre piece.

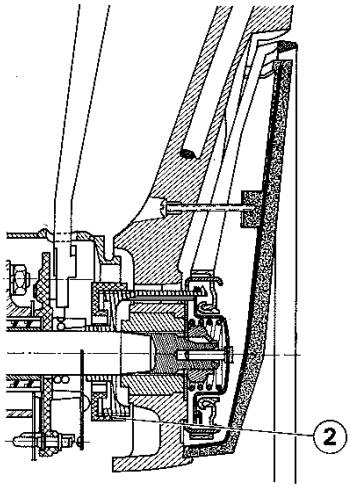

3rd fitting

As from July 1967

- Remove the lower cover.
- Screw in the adjuster **2** until contact of the horns.
- Slacken the adjuster nut approximately five notches.
- Refit the lower cover.
- Fit the cover retaining ring.

ELECTRICAL INSTALLATION

MISCELLANEOUS

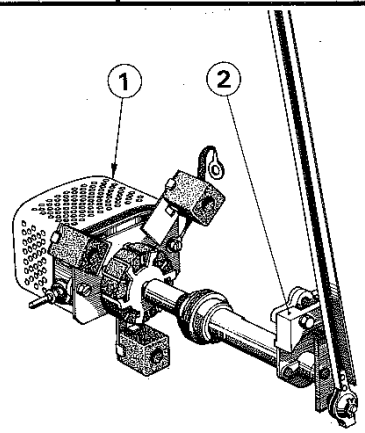

WINDSCREEN WIPER

MOTOR

1st Fitting

The S.E.V. motor **1** is mounted under the bonnet. It is operated from the dashboard.

A "Relefix" **2** interrupts the current when the wiper arms are in their lowest position.

Consumption of the motor : 2.5 Amp./h.

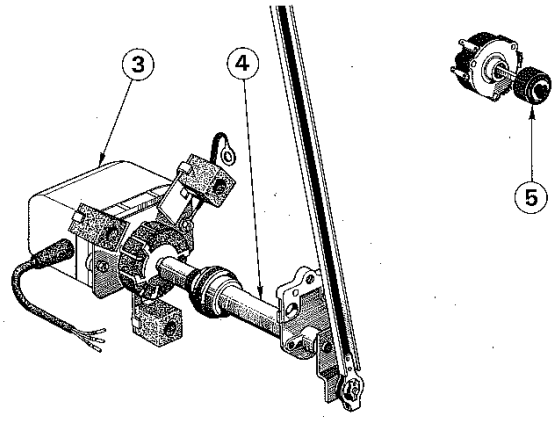

2nd Fitting

As from serial number :

404 (TW)	- 5 087 552	**404 LD**	- 4 987 592
404 (TH)	- 5 441 898	**404 U6**	- 4 776 484
404 ZF	- 8 257 554	**404 U6D**	- 4 918 332
404 KF	- 8 247 302	**404 Break**	- 6 831 412
404 D	- 4 631 863	**404 U8**	- 7 012 578
404/8	- 6 903 384	**404 U8D**	- 7 041 325
404 L (TW)	- 4 941 881	**404 U10**	- 7 063 536
404 L (TH)	- 6 831 404	**404 U10D**	- 7 080 668

- installation of a S.E.V. permanent Magnet Motor **3** (P.N. 6407.31) with incorporated fixed stop.

Consequently :

- the spindle **4** was simplified (P.N. 6416.19 in place of 6416.11) and no longer incorporates the "Relefix".
- the combined switch **5** is modified : P.N. 6409.24 (common to 204).

INTERCHANGEABILITY

The adaptation of the new motor to vehicles manufactured prior to the modification is possible on condition :

- that the switch is replaced,
- that an earth lead is fitted to the switch
- that the wiring is realised as indicated on page 08 03, class 12.

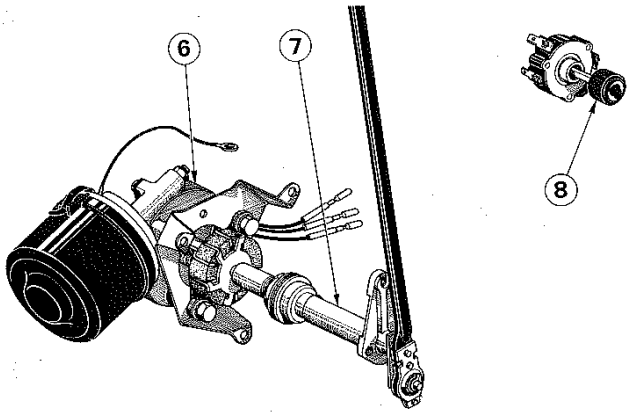

3rd fitting

404 U6 : From n° 4 759 587 to 4 760 770 and 2.000 vehicles manufactured after 4 763 821

- A Ducellier permanent Magnet Motor **6** (P.N. 6407.27 with incorporated fixed stop.
- A simplified spindle **7** (P.N. 6416.14) without the "Relefix".
- A different combined switch **8** (P.N. 6409.21) common to the 204 .

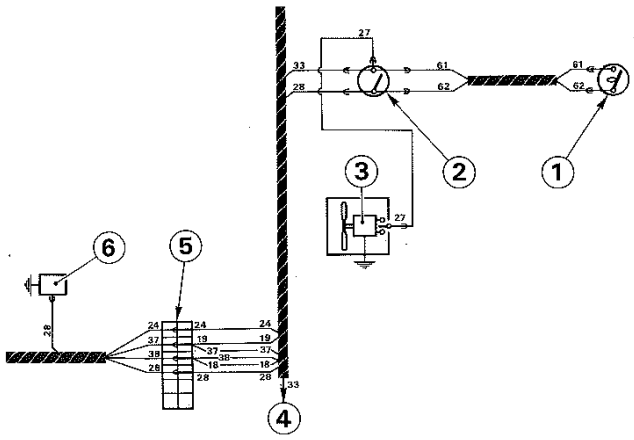

WINDSCREEN WIPER

Wiring diagrams

I - S.E.V. MARCHAL

1. "Relefix"
2. Switch
3. Heater Motor
4. Towards fuse n° F 4
5. Connector
6. Wiper motor.

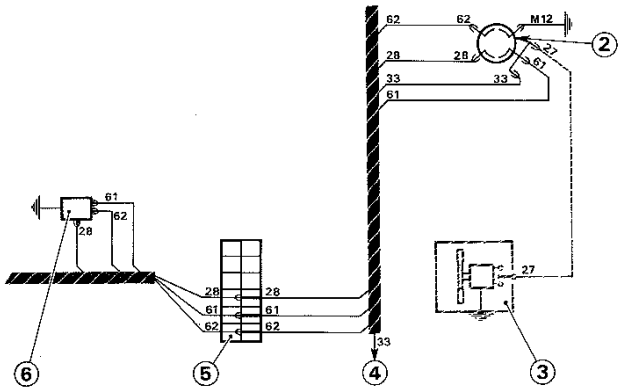

II - S.E.V. MARCHAL WITH PERMANENT MAGNET

2. Switch
3. Heater Motor
4. Towards fuse n° F 4
5. Connector
6. Wiper motor.

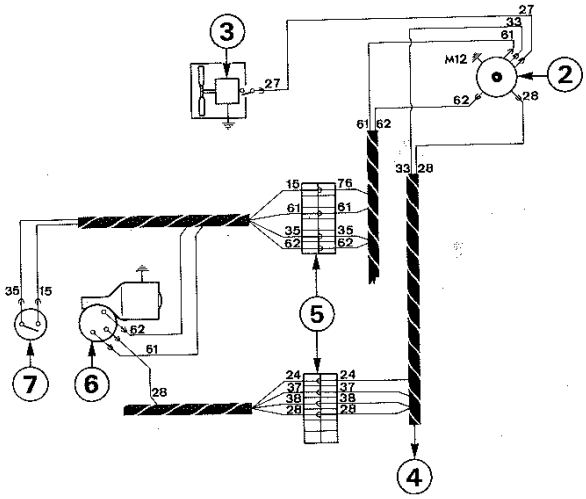

III - DUCELLIER WITH PERMANENT MAGNET

2. Switch
3. Heater Motor
4. Towards fuse n° F 4
5. Connector
6. Wiper motor
7. Stop switch.

ELECTRICAL INSTALLATION

MISCELLANEOUS

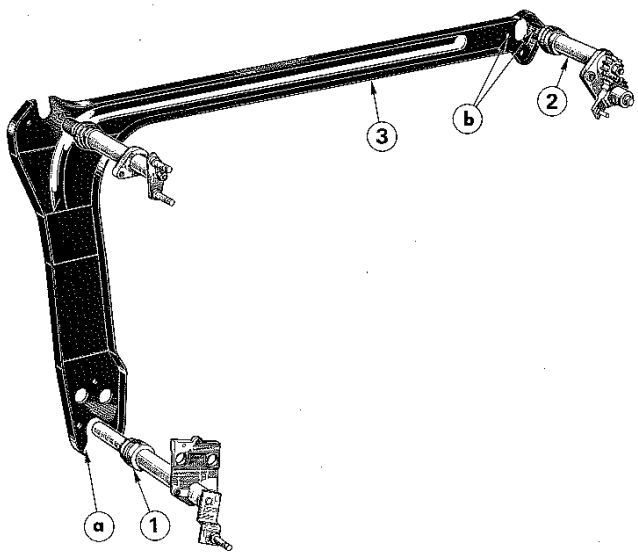

WINDSCREEN WIPER

Control

As from serial number :

404	- 5 249 622	404 L (TW)	- 4 897 437
404 SL	- 5 248 936	404 L (TH)	- 4 872 896
404 J	- 4 536 879	404 L (break)	- 4 873 030
404 KF	- 8 210 839	404 LD	- 4 982 771
404 SL-KF	- 8 210 980	404 U6	- 4 756 554
404 D	- 4 615 815	404 U6A (USA)	- 1 927 050
		404 U6D	- 4 912 695

Modifications :

- The spindle **1** (P.N. 6416.11) incorporates a collar in place of a nut to hold it against the bulkhead.
- The R.H. spindle **2** (P.N. 6425.14) has threaded holes for securing to the bracket.
- The support **3** (P.N. 6402.22) has a cutaway **(a)** to allow the spindle collar to pass.
- The holes **(b)** of the R.H. spindle are not threaded.

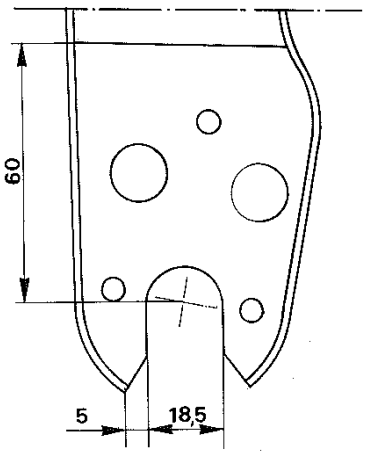

INTERCHANGEABILITY

- The spindle (P.N. 6416.11) can be fitted to 404 models manufactured prior to this modification on condition that the cutaway is realised in the lower part of the support (see drawing opposite).

- The R.H. spindle (P.N. 6425.14) can be fitted in place of that of the 1st fitting on condition that the holes in the flange are redrilled to 5.5 mm.

- The support (P.N. 6402.22) can be fitted in place of that of the first fitting, on condition that the nuts are used to secure the R.H. spindle.

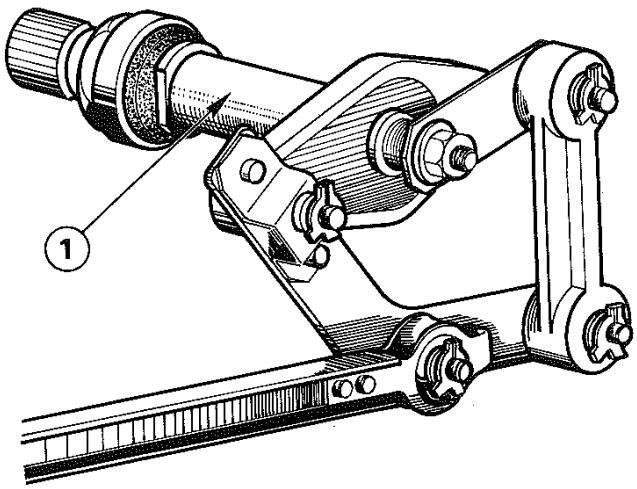

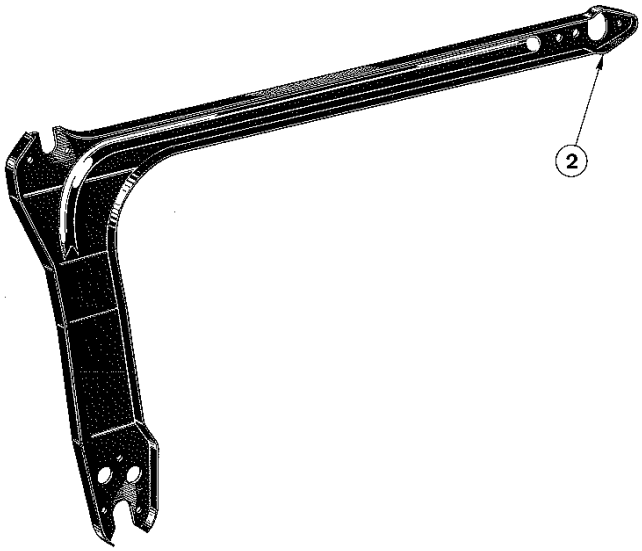

As from number :

404 (TW)	- 5 085 001	404 L (TH)	- 6 826 001
404 (TH)	- 5 415 001	404 LD	- 4 986 701
404 KF	- 8 243 001	404 U6	- 4 774 001
404 C	- 4 670 201	404 U6D	- 4 917 501
404 C.KF	- 6 801 501	404 U8	- 7 011 501
404 ZF	- 8 256 601	404 U8D	- 7 040 601
404 D	- 4 629 001	404 U10	- 7 061 001
404 L (TW)	- 4 941 601	404 U10D	- 7 080 301

The drive of the R.H. pivot of the linkage is ensured by an arrangement of links in place of gearing.

The support **2** (P.N. 6402.23 in place of 6402.22) is modified to enable the fitting of the new R.H. spindle.

INTERCHANGEABILITY

The windscreen lower crosspiece lining having been modified to enable the installation of the new control linkage, the complete linkage and the supports of both fittings are not interchangeable.

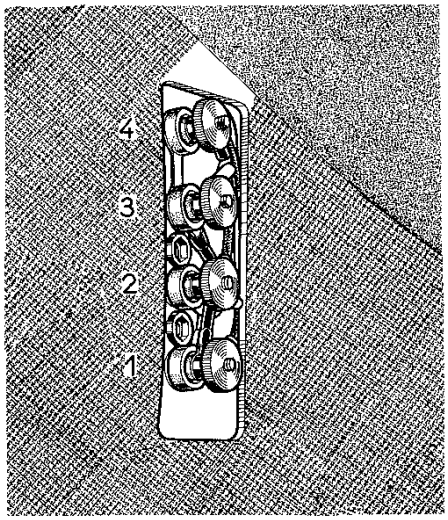

1st Fitting

- Fuse plate for 4 fuses

The four fuses mounted on a plate on the left hand panel protect :

1 - (10 Amp.) - Front and rear side lights
- Instrument panel lighting
- Luggage boot light

2 - (18 Amp.) - Inspection lamp
- Parking lights
- Roof light
- Horns

3 - (10 Amp.) - Direction indicators
- Stop lights
- Fan

4 - (10 Amp.) - Heater Motor
- Windscreen Wiper

Identification

The 10 Amp. fuses have a cadmium waist.
The 18 Amp. fuse has a brass waist.

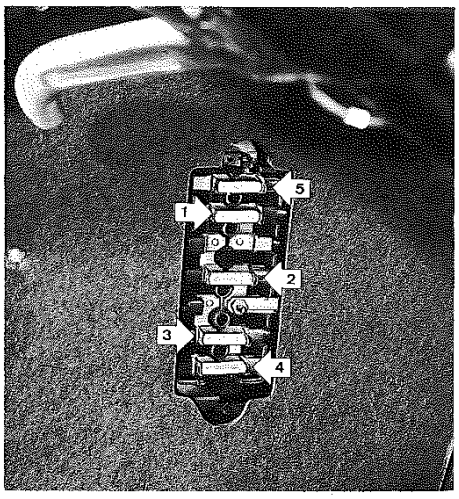

2nd Fitting

Since July 1966

- Fuse box with 5 fuses

This box contains 5 elongated fuses which protect :

1 - (15 Amp.) - L.H. front and rear side lights
- Instrument panel lighting
- Number plate light (404 U6)

2 - (15 Amp.) - Parking lights
- Horns
- Cigarette lighter
- Glove box light
- Luggage boot light
- Roof light
- Electric clock

3 - (8 Amp.) - Direction indicators
- Stop lights
- Fan
- 404 KF fuel pump

4 - (15 Amp.) - Direction indicators
- Windscreen wiper
- Fuel gauge
- Water temperature gauge
- Warning lights for : oil pressure
  - brake assistance (404 TH)
  - fuel pressure (404 KF)
  - choke

5 - (15 Amp.) - R.H. front and rear side lights
- Number plate light

Identification :

15 Amp. fuses are identified by a yellow mark
8 Amp. fuses are identified by a blue mark.

13

COACHWORK

STRIPPED FRONT & REAR DOORS
404 SALOONS AND ASSOCIATED VEHICLES
1st Installation - With trim strip

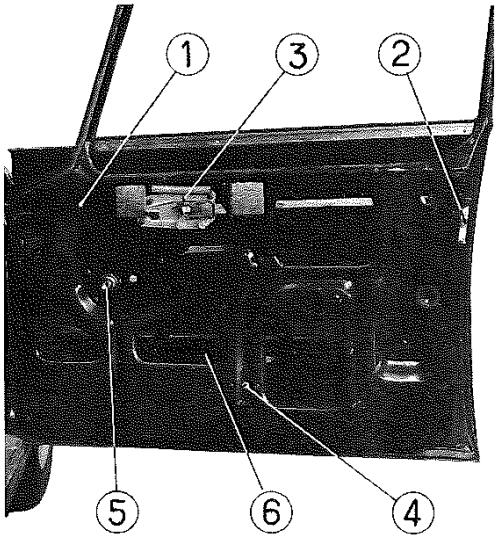

FRONT DOOR

Up to serial numbers :

404	- 4.262.348
404 J	- 4.525.037
404 L	- 4.827.008
404 LD	- 4.975.350
404 U6	- 4.704.784
404 U6D	- 4.900.974

1 - Front door

2 - Front door lock (with 176 mm long catch control rod)

3 - Remote control (attached to the inside face of the inner door panel)

4 - Window stop

5 - Front door window-lifter

6 - Support bracket for front door window.

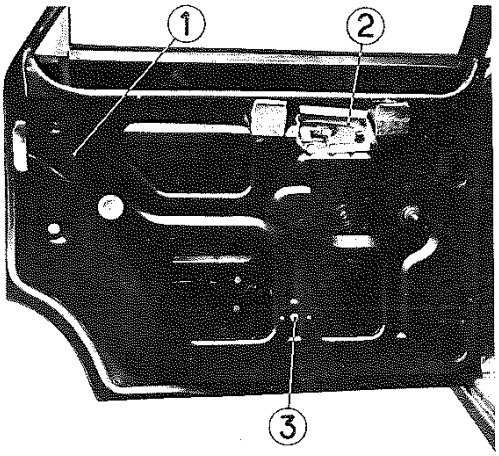

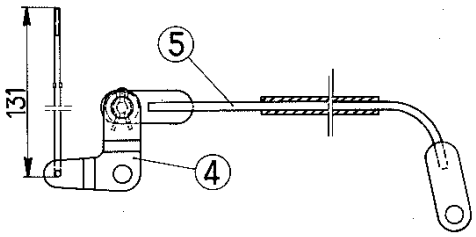

REAR DOOR

1 - Rear door

2 - Remote control (attached to the inside face of the inner door panel)

3 - Window stop

4 - Rear door control bellcrank (with 131 mm long rod)

5 - Rear door control link (with rubber sleeve).

STRIPPED FRONT & REAR DOORS
404 SALOONS AND ASSOCIATED VEHICLES
2nd installation - Without trim strip

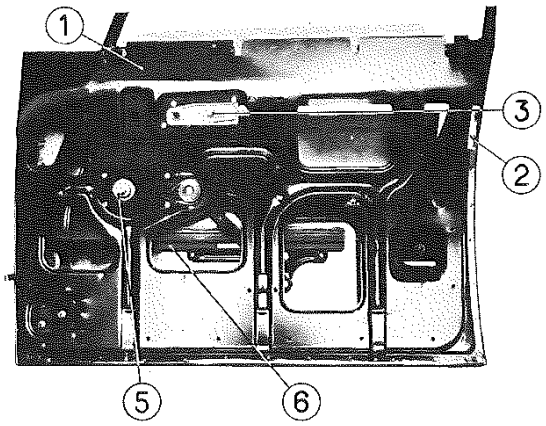

FRONT DOOR

From serial number :

404	- 4 262 349	to	5 046 809
404 J	- 4 525 038	to	4 529 913
404 KF	- 4 550 001	to	4 570 600
404 D	- 4 600 001	to	4 605 430
404 L	- 4 827 009	to	4 851 530
404 LD	- 4 975 351	to	4 979 999
404 U6	- 4 704 785		
404 U6D	- 4 900 975		

1 - Front door

2 - Front door lock (with 181 mm long catch control rod)

3 - Remote control (attached to the inside face of the inner door panel and incorporating a window-lifter gear sector to replace window panel stop 4).

5 - Window winder (front and rear identical).

6 - Support bracket for front door window panel.

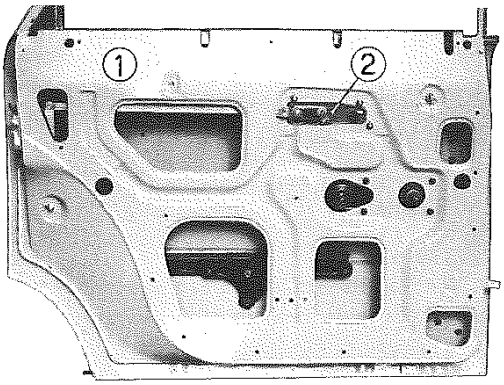

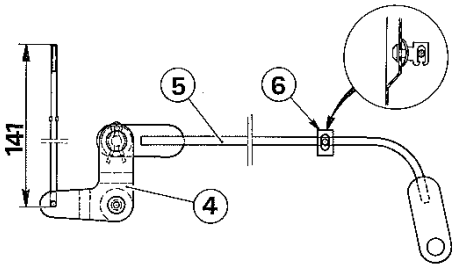

REAR DOOR

1 - Rear door

2 - Remote control (attached to the inside face of the inner door panel and incorporating window-lifter gear-sector stop to replace window panel stop 3).

4 - Rear door control bellcrank (with 141 mm long rod).

5 - Rear door control link (without rubber sleeve, but positioned by Rilsan retainer sleeve 6 secured to the door inner panel).

6 - Control link retainer sleeve.

STRIPPED FRONT & REAR DOORS
404 SALOONS AND ASSOCIATED VEHICLES
3rd Installation

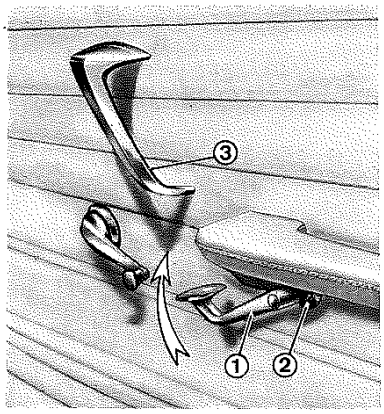

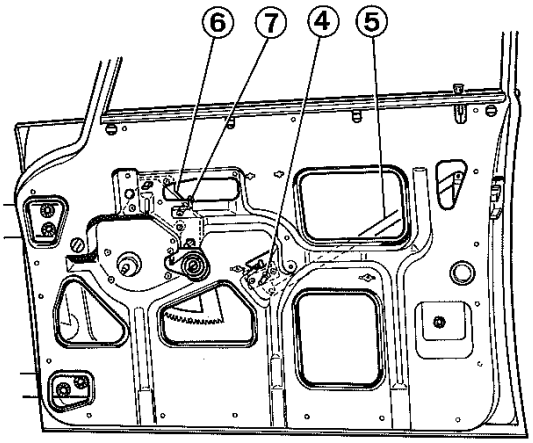

As from serial number :

404	- 5 046 810
404 J	- 4 529 914
404 KF	- 4 570 601
404 D	- 4 605 431
404 L	- 4 851 531
404 LD	- 4 980 001

Doors locks are equipped with a control lever.

1 - Lever-type door lock
2 - Control lever escutcheon
3 - Grip-handle
4 - Door remote control
5 - Door remote-control link
6 - Door lock support plate
7 - Front door window-lifter stop.

INTERCHANGEABILITY

The inner panels of the new model doors incorporate all holes and stamped sections required for installation on Saloon cars, Family cars and Utility cars.

Stripped front doors are therefore common to all three models listed above.

Stripped rear doors are identical for Family cars and Utility cars.

The new model door locks cannot be installed on cars built prior to the above modification.

Third model stripped doors may be used to replace first and second model doors.

(As regards first model doors with trim strip, refer to adaptation method, page 02 11, class 13).

REAR DOORS
404 SALOONS AND ASSOCIATED VEHICLES
4th Fitting

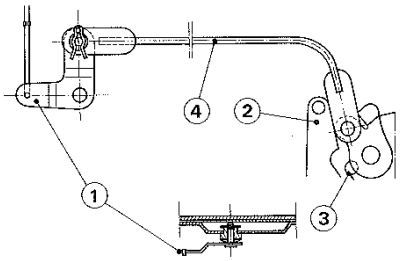

REAR DOOR LOCKS

1st Fitting

1 - Control lever rotating on a bush welded to the inner door panel.
2 - Lock with spring
3 - Spring fixed to the lock
4 - Connecting link

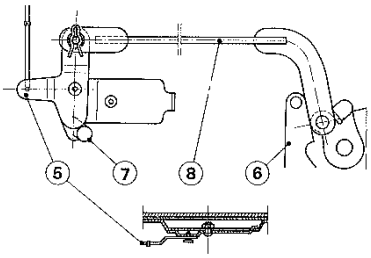

2nd Fitting

As from number :

404 (TW)	- 5 068 110	**404 L (TH)**	- 4 880 021
404 (TH)	- 5 293 818	**404 L (Break)**	- 4 879 916
404 SL	- 5 292 732	**404 LD**	- 4 983 846
404 KF	- 8 222 132	**404 U6**	- 4 761 729
404 SL.KF	- 8 222 005	**404 U6D**	- 4 914 271
404 D	- 4 619 154	**404 U6A (USA)**	- 1 927 924
404 L (TW)	- 4 898 481		

5 - Control lever pivoting on a plate
6 - Lock without spring
7 - Spring on the lever
8 - Reinforced link

The rear doors are consequently modified and have 2 holes, of 7 mm. and 10 mm. diameter, drilled for mounting the plate.

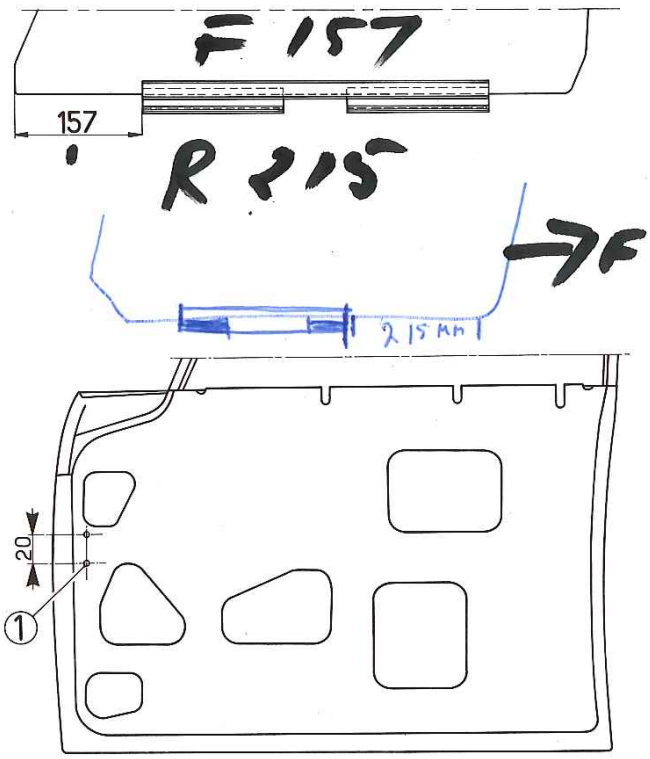

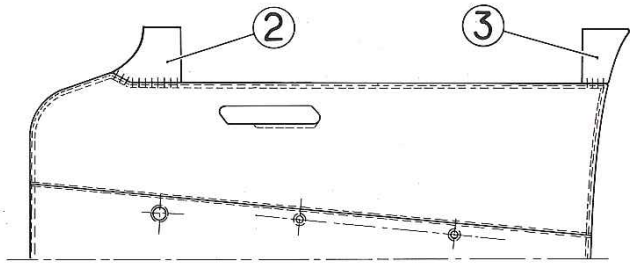

FRONTDOORS 404 SALOONS AND ASSOCIATED VEHICLES

INTERCHANGEABILITY

Procedure for adapting a second model door to permit installation on 404s built prior to this modification.

- Save the lock from the door to be replaced and install this lock on the new door.
- Install a new remote control,
  P.N 9143.06 for L.H. doors (or 07) and
  P.N 9144.05 for R.H. doors (or 06)
- Secure the control link to the bellcrank of the lock.
- Install a new window-lifter,
  P.N 9223.05 for L.H. doors, and
  P.N 9224.05 for R.H. doors.
- Save the window glass
  Replace the old fitting by fitting,
  P.N 9213.15, installed at 157 mm from the glass
- Install the glass.
- Drill a 6.3mm dia. hole 1 in the inner panel of the new door.
- Clip upholstered filler panels 2 & 3 on the door upholstery panel.
- Install the door upholstery panel.
- Install the saved trim strip by engaging its front end and lowering its rear end until it bears correctly against the edge of the door inside panel.
- Drill 2.8 mm dia. holes in the upholstery panel, using the trim strip as template.
- Secure the trim strip with 3.5 × 10 self tapping Philips head screws.
- Screw in the catch control button.
- Install the elbow-rest and door handles.

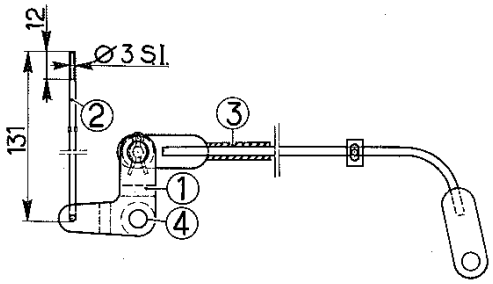

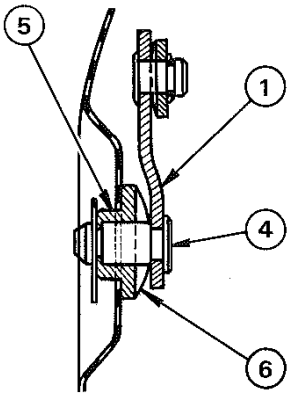

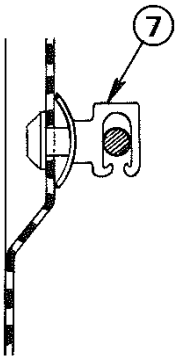

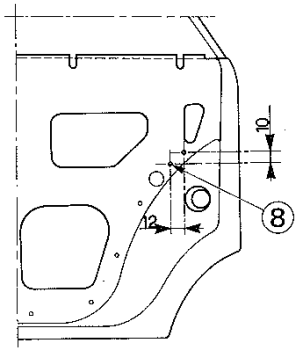

REAR DOORS 404 SALOONS AND ASSOCIATED VEHICLES

INTERCHANGEABILITY

Procedure for adapting a second model rear door to permit installation on 404s built prior to this modification.

- Save the lock from the door to be replaced and install this lock on the new door.
- Save the safety catch control and install a new bellcrank 1 .
- Cut off the end of the catch control rod to reduce its lenght to 131 mm.
- Thread the end of the rod over a lenght of 12mm.
- Move rubber sleeve **3** on the link towards bellcrank 1.
- Install the safety catch control.
- Engage bellcrank pivot **4** in bushing **5** on the inner door panel after installing spring washer **6.**
- Secure the control link to the lock bolt.
- Secure retainer sleeve **7,** P.N 9162.03, to the inner panel of the door and engage the control link in the retainer sleeve.
- Save the remote control and mount it inside the door inner panel using three H 6 × 10 screws.
- Install the window-lifter and glass lower stop saved from the old door.
- Install the window glass.
- Drill an 8 mm dia. hole **1** in the inner panel of the door.

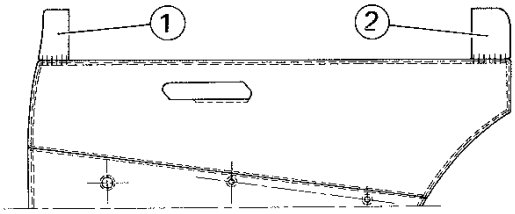

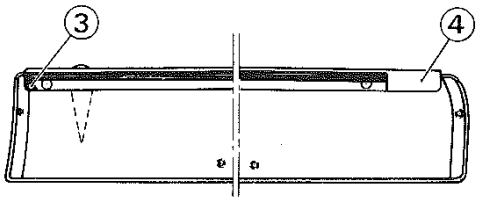

- Clip the upholstered panels **1 & 2** on the upholstery panel saved from the old door.
- Install the upholstery panel thus reworked.
- Make a bevel cut **3** at the front end of the forged edge of the trim strip saved from the old door.
- Install the trim strip by engaging the rear end **4** of the forged edge between the inner door panel and the border strip ; then rotate the front end of the trim strip until it bears correctly against the edge of the door inner panel.
- Drill a 2.8 mm. dia hole in the upholstery panel and door inner panel ; use the trim strip as template.
- Secure the trim strip with 3.5 × 10 Philips head sheet-metal screws.
- Screw in the catch control button and install the elbow-rest and door handles.

BODYWORK
DOORS

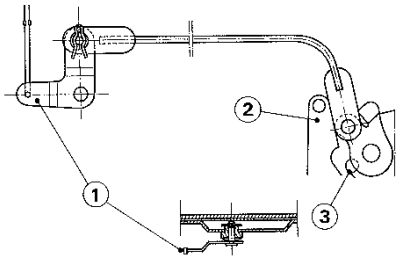

404 SALOONS AND ASSOCIATED VEHICLES - REAR DOORS

INTERCHANGEABILITY

Adaptation of a 4th fitting rear door to vehicles manufactured prior to this modification.

It is necessary :

- to replace the lock control lever **1** with a lever P.N 9159.13 for the L.H. side and 9159.14 for the R.H. side.
- to remove the spring **3** on the lock **2.**

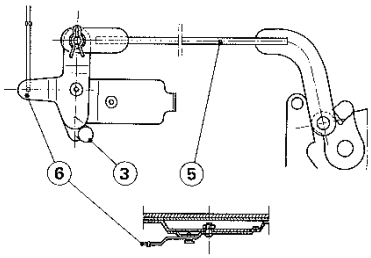

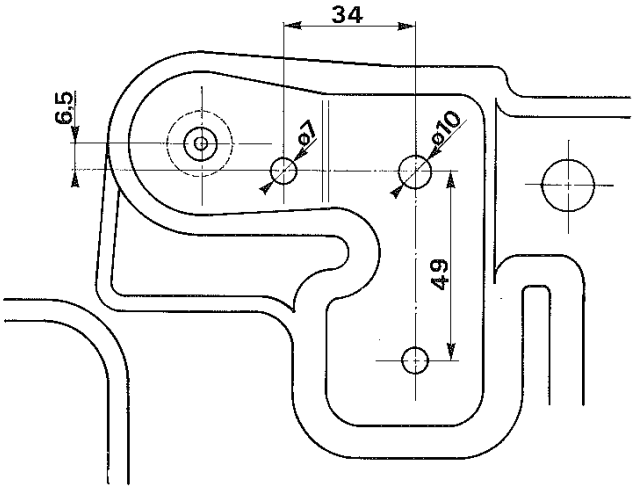

Adaptation of the 4th fitting locks and control levers on the rear doors of 404 vehicles manufactured prior to this modification.

- The locks are adaptable on condition that the spring **3** (P.N. 9139.08 for the L.H. side and 9139.09 for the R.H. side) is fitted.
- The links **5** are interchangeable.
- The control lever **6** of the 4th fitting can be adapted on condition two holes, of 7 mm. and 10 mm. diameter, are drilled as shown opposite.

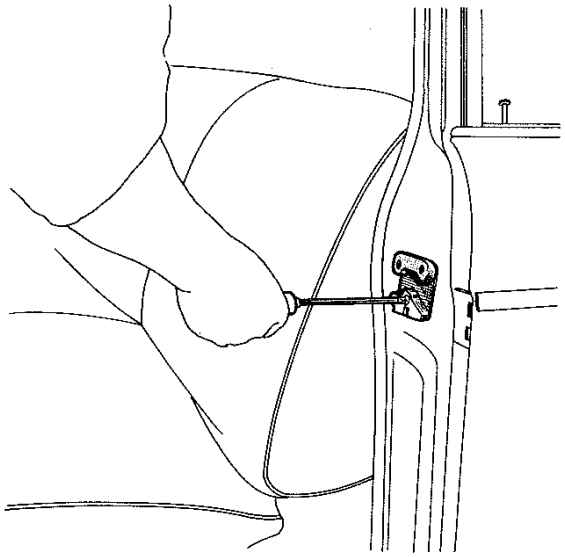

ADJUSTING THE DOOR LOCKS

- Make sure that the lock and its control function freely and that the door hinges are secured and not distorted.
- Slacken the three catch screws and move the catch outwards.
- Depress the knob on the door handle and close the door firmly without releasing the knob.
- Open the door and release the knob.
- Tighten the catch screws.
- Check the closing and correct if necessary.

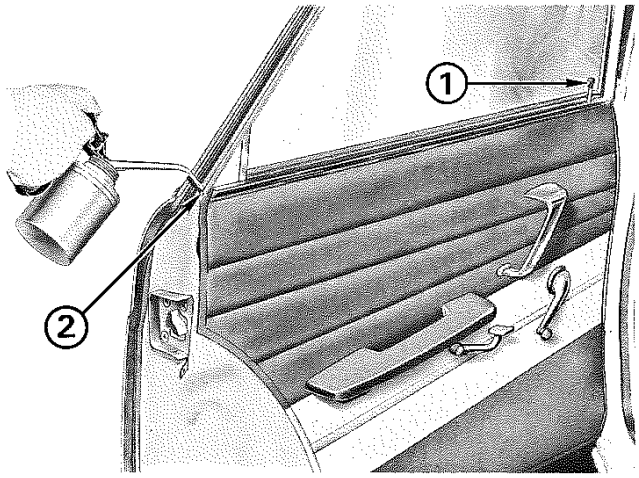

MAINTENANCE

Catch and remote control

- Lightly oil the mobile pad and the rod.
- Never oil the nylon safety catch.

To remedy a possible stiffness of the interior rear door locking control, procede as follows before removing the inner panel:

- Raise the knob 1
- Using an oil can, pour a few drops of oil into the hole 2.
- Wait a few minutes to allow the oil to penetrate into the mechanism, then operate the knob 1 a number of times.

404 CONVERTIBLES & COUPES

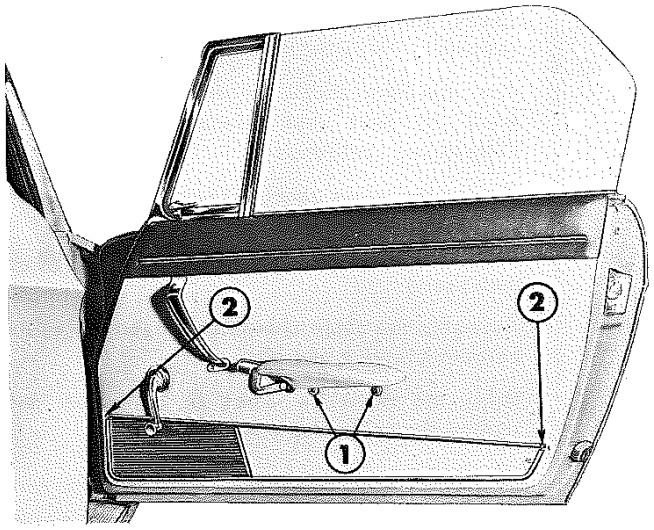

REPLACING THE GLASS PANEL OF A DOOR

- Remove :
  - window-winder
  - inner door-opening handle.
  - two screws 1 located under the arm-rest (the arm-rest remains attached to the upholstery panel),
  - both attachment screws 2 for the door lower trim bar.
- Unstitch the upholstery panel and pull it down to remove it.
- Remove the upper trim strip (3 screws) by sliding it rearwards to disengage it from the ventilator handle.
- Peel off the vinyl sheet used to cover the inner door panel.

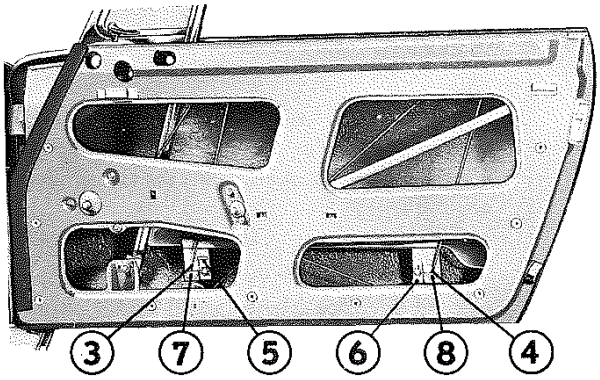

- Mark the glass panel fitting attachment points on both sections of the cable (ref. n° 3 & 4)

- Remove :
  - both glass panel stops 5 & 6
  - both cable clamps 7 & 8.

- Remove the glass panel fitting.

- Remove all broken glass from the lower part of the door, if necessary.

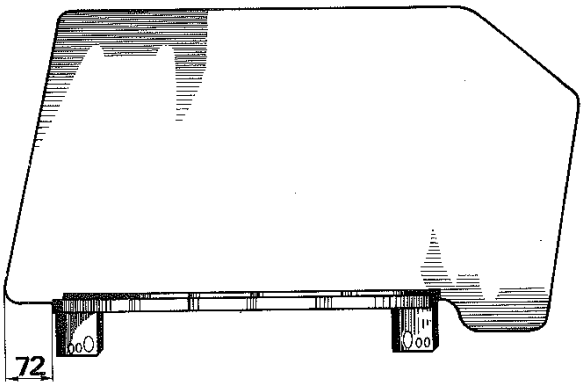

Working at the bench :

- Replace the glass panel rubber wedge, P.N 9209.10, systematically.

- Clean the glass panel fitting thoroughly.

- Smear the rubber wedge and fitting with cement.

- Place the wedge and fitting on the glass panel ; **the distance between the end of the fitting and the front end of the glass panel should be 72 mm.**

- Remove excess glue.

404 CONVERTIBLE AND COUPES

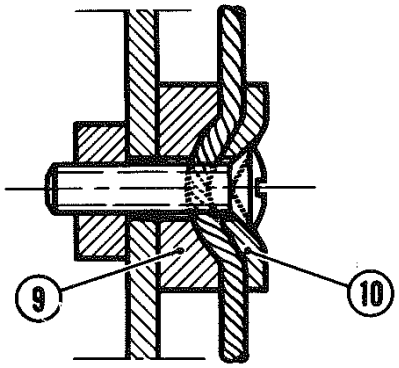

- Check the alinement of the ventilator with respect to the slide on the door.
- The ventilator should be removed and straightened if bent (see class 13, page 02 24 "Replacing ventilators").
- Engage the glass panel in the slide, make sure the glass panel does not bind, and lower it fully (adjust the position of rear slide if necessary).
- Assemble the cable clamps and insert the cable between plates **9** and **10**.
- Bring the reference marks in alinement and tighten the cable clamp screws.

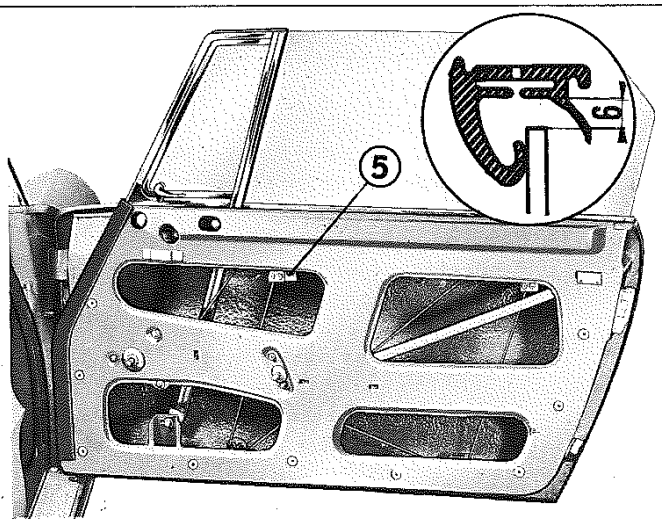

Adjustment of the upper stop :

- Close the door and raise the glass panel until its top edge is at 6 mm from the bottom of the upper rubber gasket, as shown on drawing opposite.
- Install front stop **5** against the corresponding pad on the door inner panel and tighten the attachment screw.

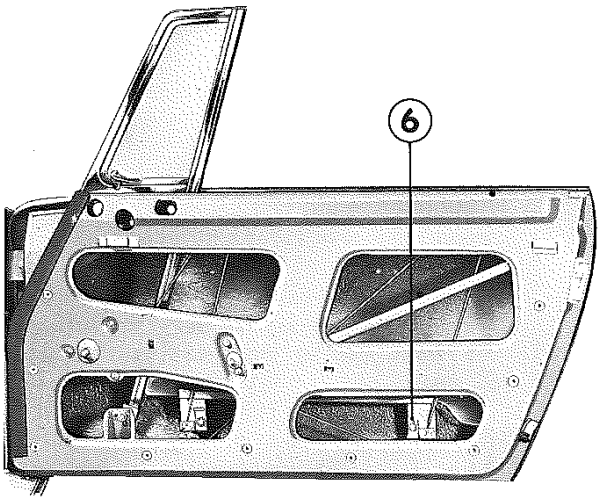

Adjustment of the lower stop :

- Lower the glass panel until it is flush with the outer trim and rubber gasket.
- Install rear stop **6** against the corresponding pad on the door inner panel and tighten the attachment screw.
- Check that the glass panel slides freely ; raise it fully.
- Glue the vinyl sheet on the door inner panel.
- Re-install the trim strip, upholstery panel and door opening handle.
- Install the window-winder by turning it towards the front and slanting it about 45 deg. downwards.

404 CONVERTIBLES AND COUPES

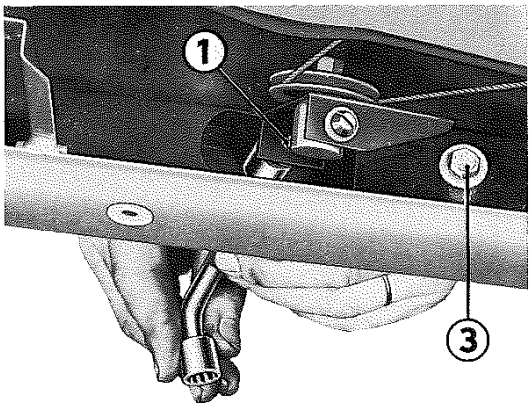

REPLACING A WINDOW-LIFTER AND CABLE ASSEMBLY

- Remove :
  - upholstery panel and trim strip (see class 13, page 02 21)
  - both cable clamps,
  - glass panel stops,
  - glass panel together with its fitting
  - window-winder

- Slacken cable tensioner **1** located on the lower pulley-bar ; to achieve this, remove the rubber plug from the lower end of the door to gain access to the tensioner screw.

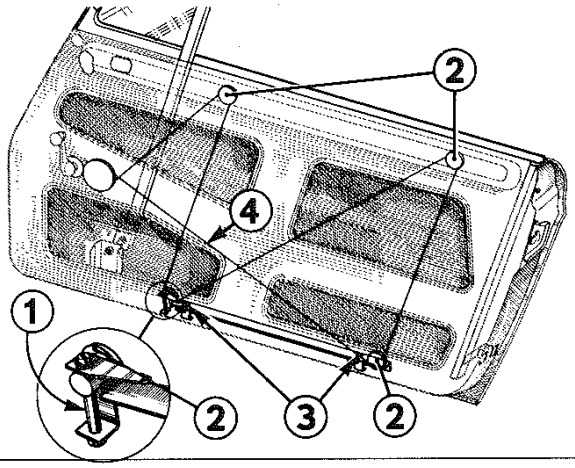

- Check that all 4 pulleys **2** rotate freely.

- Secure the new window-winder.

- Engage the cable on the 4 pulleys successively, as indicated on drawing opposite (section **4** of the cable should be in front of the other cable sections).

- Turn tensioner screw **1** as required to obtain moderate tension of the cable.

- Adjust position of lower pulley bar by slackening attachment screws **3** to prevent the cable runs from rubbing against each other.

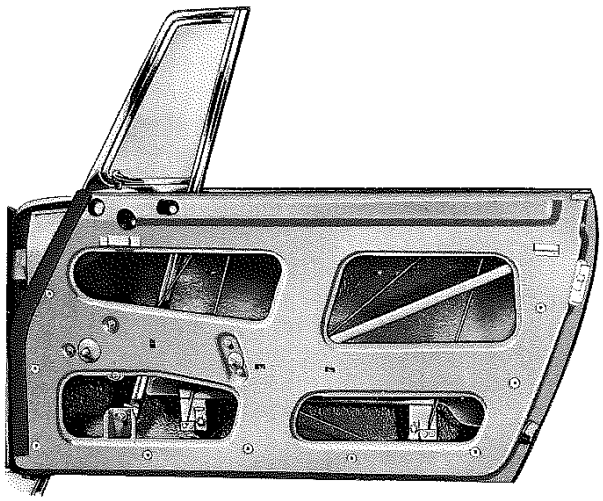

- Insert the glass panel in the corresponding slides, check that the glass panel does not blind, then lower it fully.
- Turn window-winder backwards fully.
- Rotate it forwards by two full turns.
- Install both cable clamps with the crank in this position, and tighten the cable clamp screws.
- Install and adjust the window stops (see page 02 22 class 13).
- Check for proper operation and lubricate the window-winder mechanism.
- Raise the window panel.
- Re-install the trim strip, upholstery panel, door-opening handle and window-winder which should be turned towards the front and slanted about 45 deg. downwards.

BODYWORK
SIDE WINDOWS AND CONTROLS

404 CONVERTIBLES AND COUPES

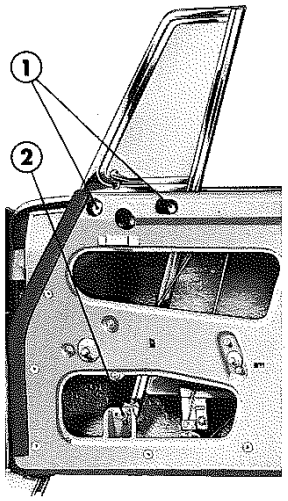

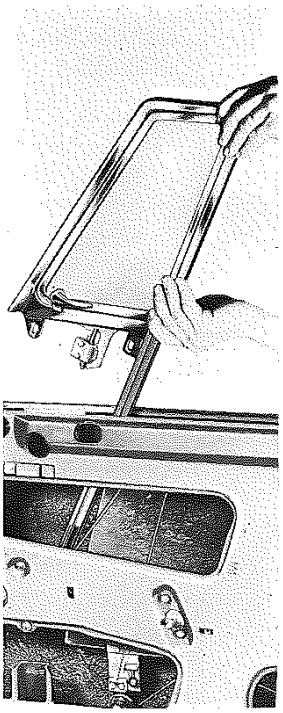

REPLACING A VENTILATOR

Removal :

- Remove : - Upholstery panel and trim strip (see class 13, page 02.21
  - both upper attachment screws **1**.
  - lower attachment nut **2**.
- Raise the ventilator to remove it.

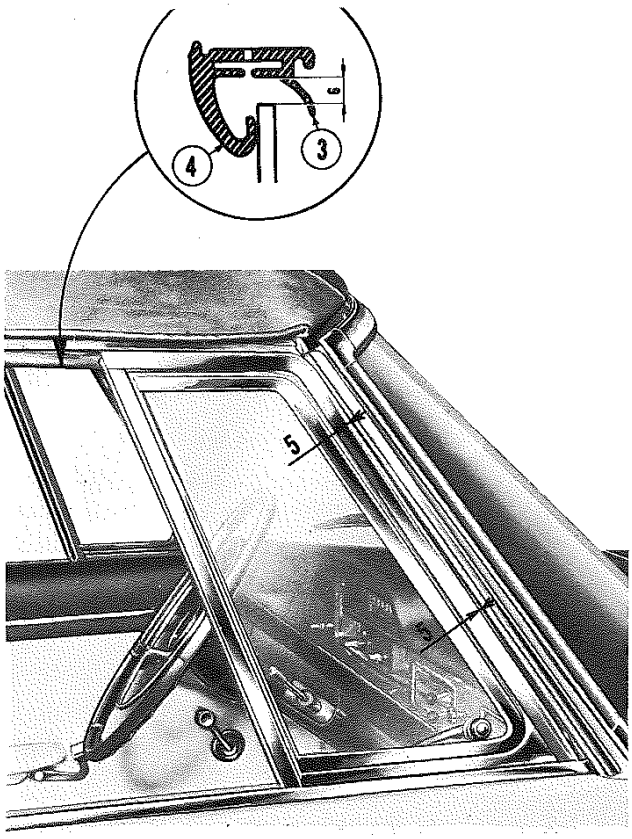

- Installation :

- Engage the ventilator in the door and secure, nut do not tighten, the attachment screws.
- Adjust ventilator position, proceed as follows :
  - move lower attachment screw **2** in its mounting slot to obtain an even clearance of about 5mm between ventilator frame and windscreen lateral upright.
  - move lower attachment **2** laterally to bring the ventilator in complete contact with the door rubber gasket and to give the proper angle to the glass panel ; the outside lip of rubber gasket **3** should cover the glass panel, and the glass panel should bear against inner lip **4**.
- Tighten ventilator attachment screws.
- Check that the window panel slides freely ; adjust the lower attachment of the window rear channel if required.
- Re-install the trim strip, upholstery panel, door-opening handle and window-lifter crank.

404 CONVERTIBLES AND COUPES

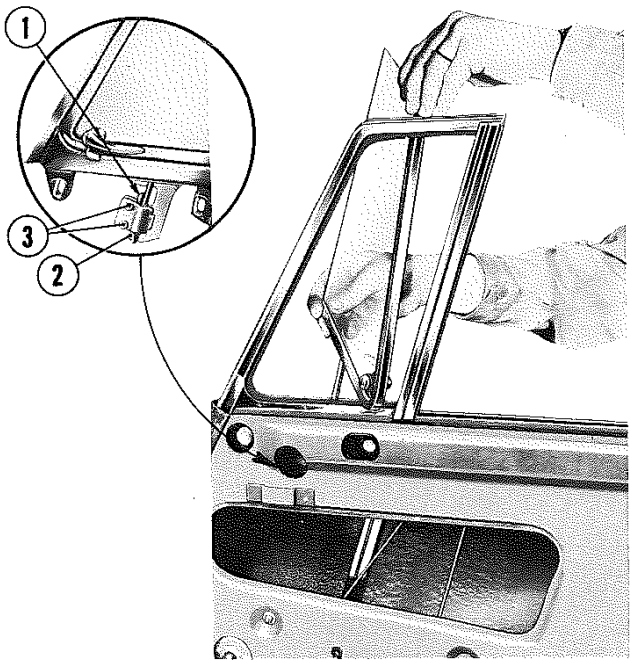

REPLACING A MOBILE FRAME AND VENTILATOR

Removal :

Remove :

- upholstery panel and trim strip (see class 13, page 02 21)
- both stop screws **1** & **2** on the lower pivot rod,
- upper pivot screw.

- Slacken both screws **3** on lower bearing.

- Lift the mobile frame and turn it inwards to remove it.

Installation :

- Installation is the reverse of the removal procedure.

- Adjust hardness of rotation of the ventilator by tightening screws **3** as required.

REPLACING THE GLASS PANEL OF A VENTILATOR

- Remove the ventilator mobile frame (see above)

- Save the ventilator handle.

- Clean the mobile frame carefully.

- Install a new rubber gasket, P.N 9338.05, on the glass panel. Trim and cut off the corners.

- Smear with tallow and install the above assembly in the frame by tapping lightly with a mallet on the edge of the glass panel (the frame should bear evenly on a wooden block).

- Cut off the ends of the rubber gasket and clean the glass panel.

- Install the ventilator handle.

- Re-install the ventilator mobile frame (see above).

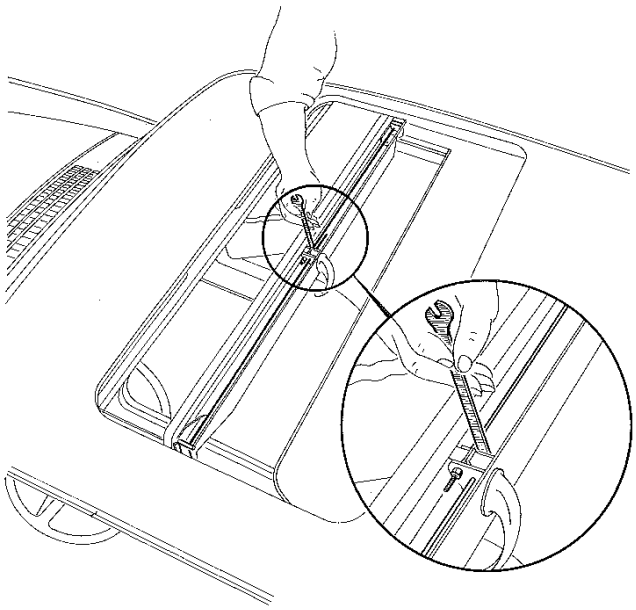

REMOVING THE SLIDING PANEL

- Place seat covers over the seats
- Close and lock the sliding panel
- Remove the 4 screws securing the front crosspiece
- Raise the panel at the front and disengage it.

Make sure that the panel does not rub against the roof whilst doing this.

- Remove the crosspiece if necessary by unscrewing the Nylstop nuts on the lock rods.

Refitting the crosspiece

- Refit the crosspiece, the locks and the rods.
- Tighten the Nylstop nuts to obtain an equal tension of the 2 rods and easy movement of the handle.

***NOTE** - This can be effected without removing the panel and must be carried out when the locking is no longer satisfactory.*

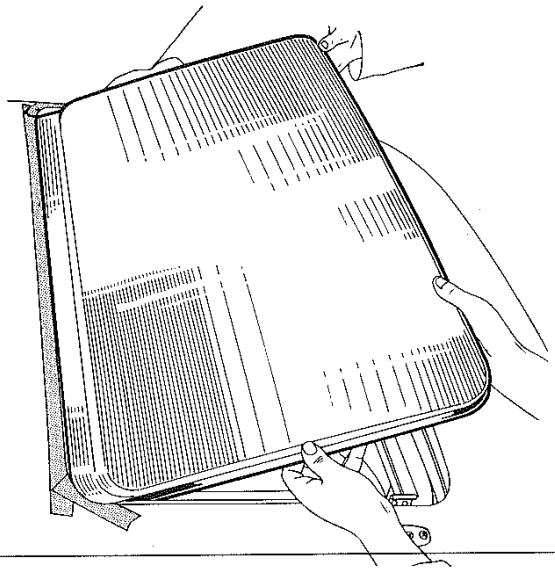

REFITTING THE SLIDING PANEL

- Protect the roof with masking tape
- Present the panel, raising it slightly at the front to engage the tension springs equipped with the top rollers under the roof.
- Push the panel, easing from the inside at the rear, to engage the lower rollers on the tracks.
- Centre the crosspiece on the panel and secure it.
- Operate the sliding roof.

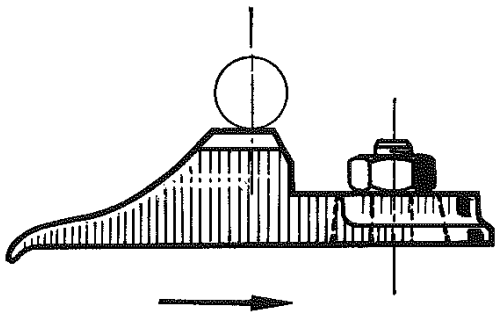

ADJUSTING THE TRACKS

If, when opening the sliding panel, it turns and sticks :

- Close it
- Check the position of the lower rollers on the lifting tracks.
- Adjust each track so that the rollers engage on the ramp simultaneously.

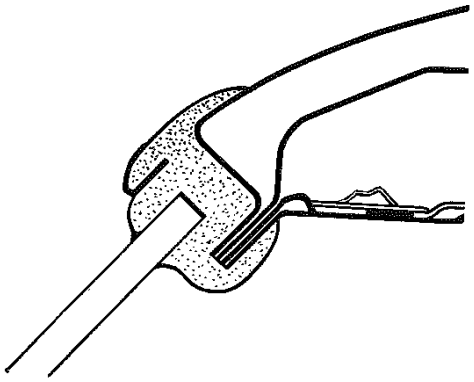

REMOVAL

Fit the wing and seat protectors.

Remove :
- the wiper arms
- the windscreen trim
- the sunvisors and rear view mirror
- the windscreen frame lining.

Windscreen to be re-used

Disengage the windscreen outwards using a rubber mallet.

If difficulty is encountered, cut the outer lip of the joint away and remove the screen and the joint.

Broken or cracked windscreen

If the windscreen is cracked, stick adhesive paper over the whole surface and cover :

- the air intake grille
- the air vents
- the defrosting ducts,

Then continue as above.

If the screen is broken, clean the heater and ventilation ducts thoroughly as well as inside the car.

BODYWORK
WINDSCREEN

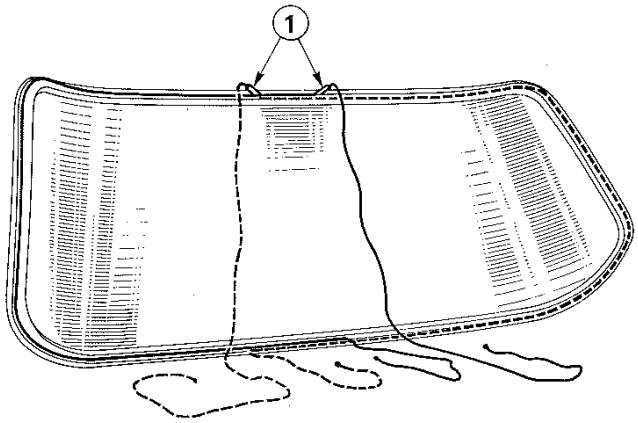

PREPARATION

- Clean the frame toroughly
- Fit a new seal on the screen with the joint in the middle at the top.
- Engage two cords between the outer and inner lips of the seal.
- Cross the extremities at the top and bottom as shown opposite.

***NOTE** - Wax the cords to facilitate their removal and use two tubes 1 (7 or 8 mm outer diameter) to engage the cords.*

Make sure that the drainage holes at each side of the bottom of the frame are not blocked. Clear them using a 5 mm diameter punch.

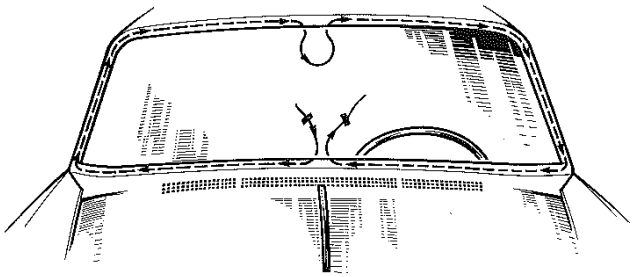

REFITTING

Fitting the screen

An assistant will be required.

- Position the glass on the frame, with the strings inside the car.
- Pull alternately on each string, so as to pull the inner lip over the lower panel.
- At the same time, strike from the outside, to facilitate locating the glass.
- Do not strike the treated area of the "bisecurit" screen.
- The operation ends near the L.H. and R.H. upright centres.
- Refit the accessories. Clean the glasses.

Fitting the trim

- Place a cord between the lips of the seal as shown opposite.
- Engage the L.H. and R.H. trims in the lip making sure that it fits well in the corners.
- Pull the cord in the direction of the arrows whilst pushing on the trim to engage it completely.
- Slide the plates of the unions in the trim.

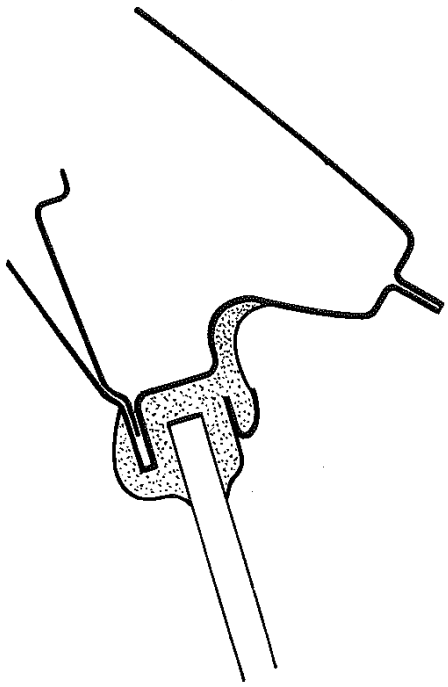

REMOVAL

- Remove the rear seat and backrest
- Then procede as for the windscreen (page 05 01, class 13).

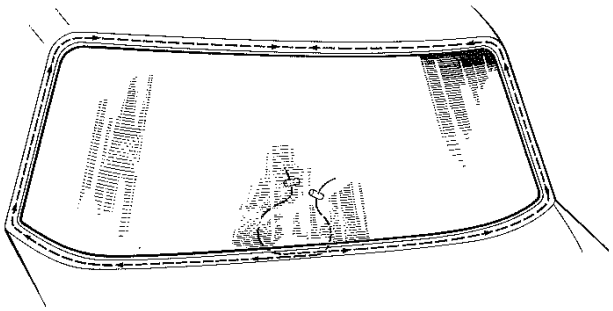

REFITTING

- The fitting of the rear window is effected in the same way as for the windscreen, using only one string.
- Finish the fitting at the top in the middle.

FITTING OF FRONT TWIN COLOUR LIGHTS ON 404 MANUFACTURED BEFORE "MOTOR SHOW 1965"

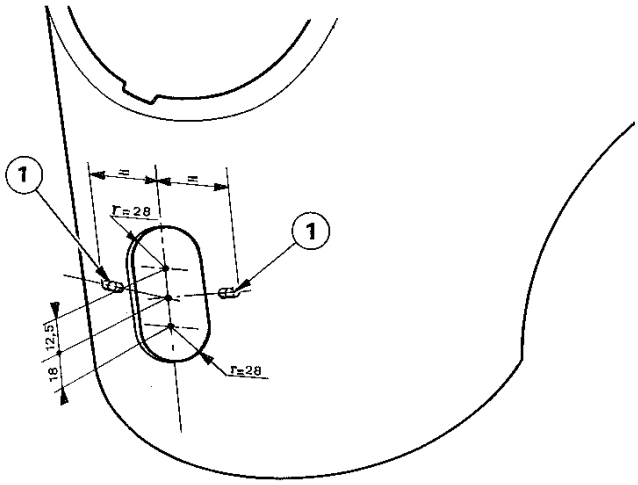

- Remove the front lights and the connecting wires with their neoprene tube from the engine side of the wing valance.

- Trace and drill a hole in the wing as shown opposite, using the existing fastening holes **1** as guide marks for tracing a symmetry axis.

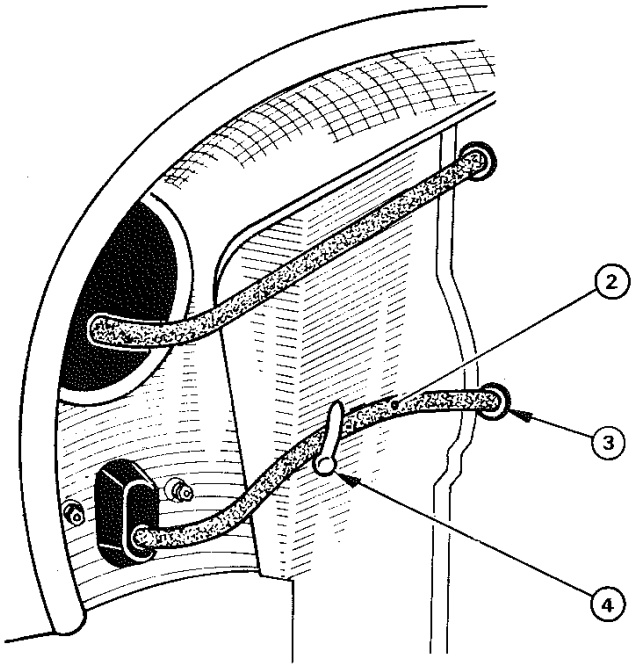

Internal view of the wing

- Fit the twin coloured front light (P.N. 6302.47) with its joint P.N. 6304.19 installing the connecting wires and the protection tube **2** through the small hole **3**.

- Tighten the clamp **4**

- If the old wires are too long, cut them to size.

- Fit onto the end of these shortened wires the corresponding retractable insulators :
  . n° 37 and 55 for the front L.H. light,
  . n° 38 and 56 for the front R.H. light.

- Fit female connectors (P.N 6540.09) and engage the retractable insulators onto these connectors.

- Connect these female connectors to the corresponding wire insulators of each front light.

METHOD OF FITTING A 404 "1st MODEL" FRONT LIGHT ON A 404 "1966 MODEL" WING

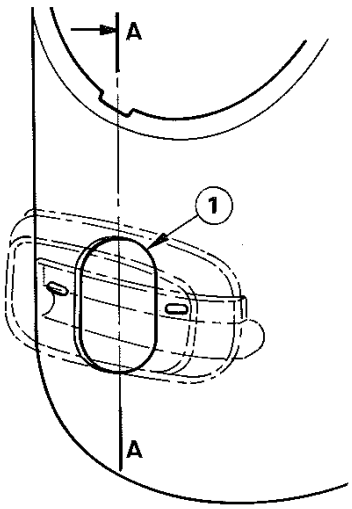

Section A

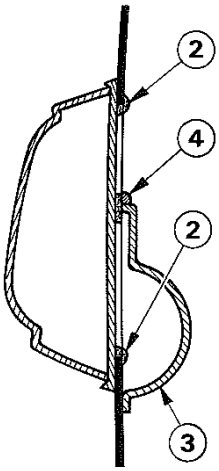

- Thread the wires through the small wing hole 1 and then into the front light joint.
- Connect the wires and put the front light on the wing.
- Put an adhesive sealing compound 2 on the inside of the wing around the small hole rim 1 and between the wing and the front light joint.
- Fit the wire protector 3 and install the assembly (front light-protector).
- Make sure that the sealing compound 2 is still in place, if not add as necessary.
- Apply the sealing compound 4 along the whole of the length of the upper part of the protector 3.
- Fit and tighten the wires in the clamp 5.

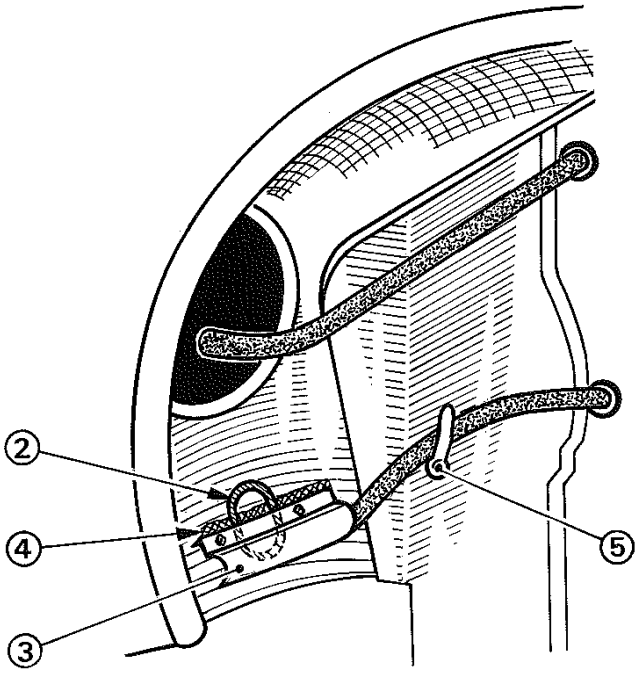

Internal view of the wing

IMPORTANT

Apply the sealing compound correctly to all the points indicated 2 and 4 to avoid water and mud entry in the front light.

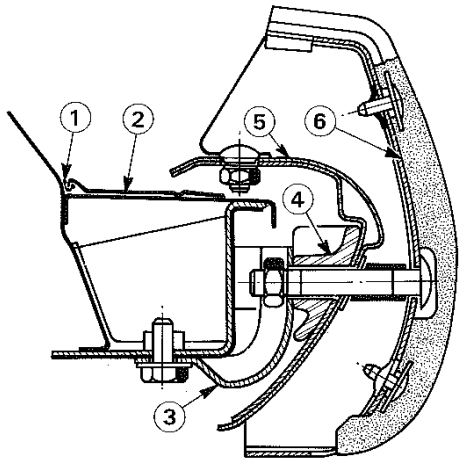

1. Rear bumper seat trimming plastic joint
2. Rear bumper seat trimming
3. Rear bumper fastening support
4. Fastening spacer
5. Rear bumper
6. Rear bumper protector

REAR BUMPERS

As from serial number :

404 TW - 5 075 001
404 TH - 5 311 001
404 ZF - 8 251 301
404 KF - 8 224 863
404 D - 4 619 853

the side parts of the bumper have been lengthened and the rear fastening on the bodywork modified.

- Two bolted supports on the rear floor rear cross-member replace the counter-plate.

INTERCHANGEABILITY

The parts of the two fittings are not interchangeable.

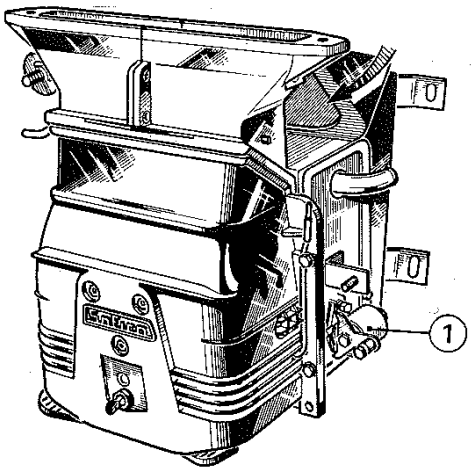

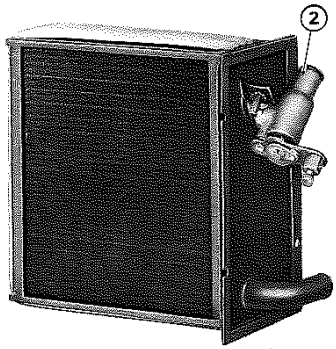

SOFICA HEATER

The Sofica heater allows all combinations :
- heating
- defrosting - demisting
- ventilation

It is essentially made of a bakelite casing which contains :
- a radiator
- an electric motor with turbine

The constituant elements differ according to the atmospherical conditions of the countries where the cars are delivered.

1st Fitting

1 - The tap is at the bottom of the heating radiator
2 - From April 1962 on, the tap is at the top of the radiator which has meant a modification of the heating tubes and the heating tap control.

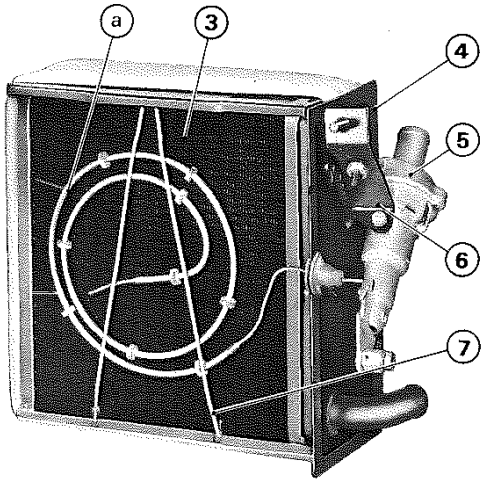

2nd Fitting

On 404 Saloons, Family cars, Convertibles and Coupés.
From serial numbers :

404	- 5 177 275	**404 C**	- 4 498 565
404 SL	- 5 161 001	**404 C.KF**	- 4 596 140
404 J	- 4 535 803	**404 L**	- 4 862 613
404 J.SL	- 4 535 581	**404 L (Break)**	- 4 862 531
404 KF	- 4 581 818	**404 LD**	- 4 981 412
404 D	- 4 610 568		

the Sofica heater is fitted with a thermostatic tap which has necessitated the fitting of :
- a longer heater control (420 mm instead of 380 mm)
- a control trimming whose "blue" and "red" positions are inverted.

3 - Radiator
4 - Rear casing closing plate
5 - Thermostatic tap with tubing (a)
6 - Lining holder clamp of the tap fastening
7 - Tubing support

On Commercial vehicles
From Serial number :
404 U6 - 4 748 200 **404 U6D** - 4 910 155
the heater is fitted with a tap with the same diaphragm as on the 204.
The controls are the same as those on cars with a thermostatic tap.

BODYWORK
HEATERS - CONTROLS

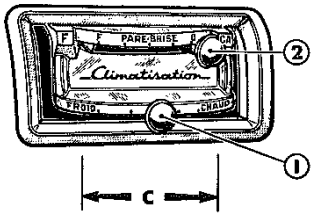

CONTROLS ON THE DASH-BOARD

1st Fitting

1 - Heater entry lever for air coming from the outside - vertical movement.
- Radiator water tap lever - horizontal movement **C**

2 - Windscreen defroster lever.

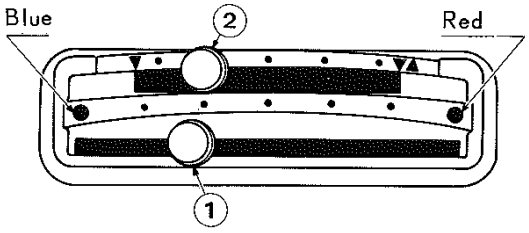

2nd Fitting

From September 1961
- Heater entry control for air coming from the outside, a lever below the dashboard.

1 - Tap lever
2 - Windscreen defrosting lever.

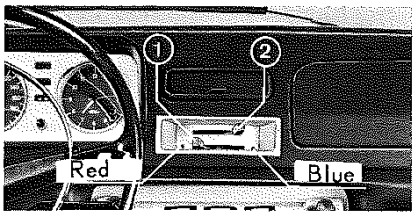

3rd Fitting

From June 1965
- Control **1** has been inverted through fitting of the thermostatic tap.

From July 1967
- The controls are fitted into the dashboard.

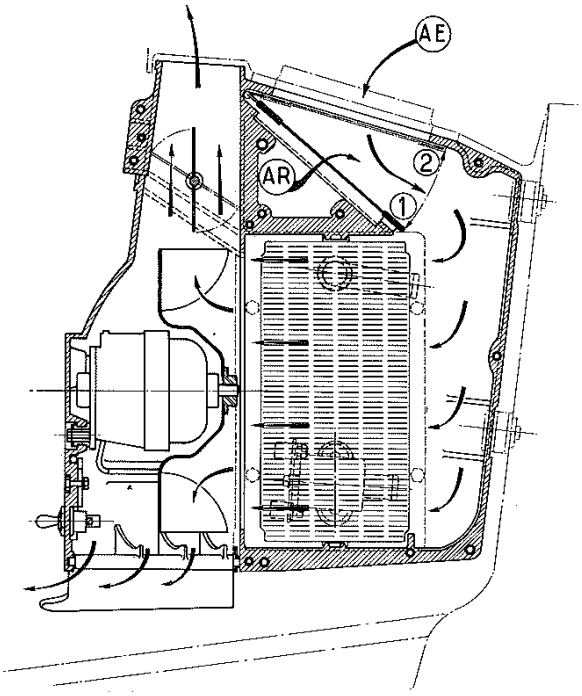

AE - Outer air admitted ; shutter in position 1
AR - Air recycled ; shutter position 2

WORKING

1st Fitting

Lever 1 in position :	Upper shutter 3 :	Tap 4 :
F	Closed	Closed
Cold	Open	Closed
Warm	Open	Open
Accelerated heating	Closed	Open

***NOTE** - Position **C**, relative opening of the tap.*

2nd and 3rd fittings

Lever under the dashboard
- In - Upper shutter **3** closed.
- Out - Upper shutter **3** open.

Lever **1** in position
R (red) : tap **4** open
B (blue) : tap **4** closed

Lever **2** in position :	Shutter **5** :
F or ∇	Closed
O or ∇ Δ	Open

To accelerate the air circulation (cold or warm) turn on the ventilator by the switch **6**.

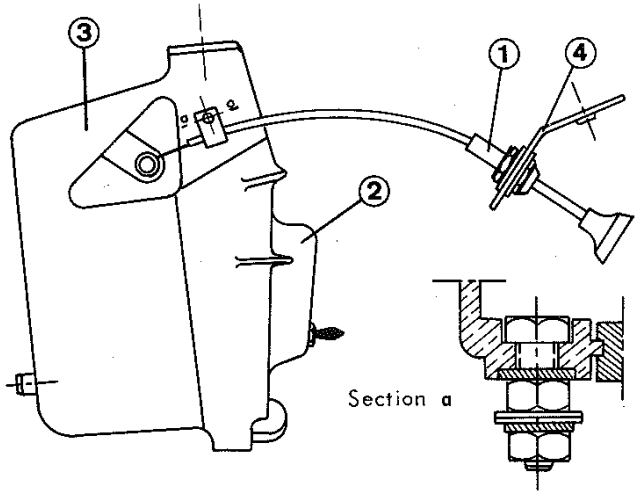

AIR ENTRY CONTROL

1st Fitting

1 - Flexible air entry control
2 - Heater
3 - Heater rear casing
4 - Fastening bracket

2nd Fitting

From serial numbers :

404	- 5 120 056	**404 LD**	- 4 980 351
404 J	- 4 535 154	**404 U6**	- 4 742 191
404 KF	- 4 574 404	**404 U6D**	- 4 909 048
404 D	- 4 607 502	**404 U6A**	- 1 923 776
404 L	- 4 855 291	**404 Break**	- 4 855 157

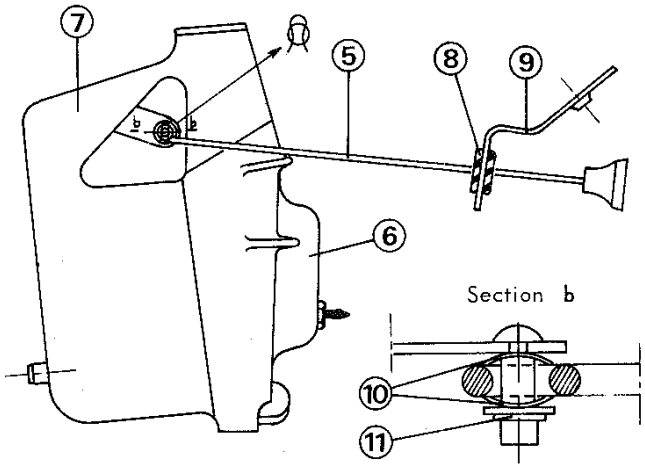

5 - Rigid air entry control
6 - Heater
7 - Heater rear casing
8 - Rubber grommet
9 - Fastening bracket
10 - Elastic washers
11 - Stop ring

The fitting of the rigid control has meant changing the fastening bracket on the dashboard and the removal of its attachment point on the heater.

INTERCHANGEABILITY

The rigid control of the 2nd fitting can be fitted to cars made before the modification, provided the following are replaced :
- the heater rear casing
- the fastening bracket

The flexible control can be fitted instead of the rigid tube as long as :
- a groove is made on the fastening bracket on the dashboard.
- a nut and bolt are fitted to the heater casing to support the tube.

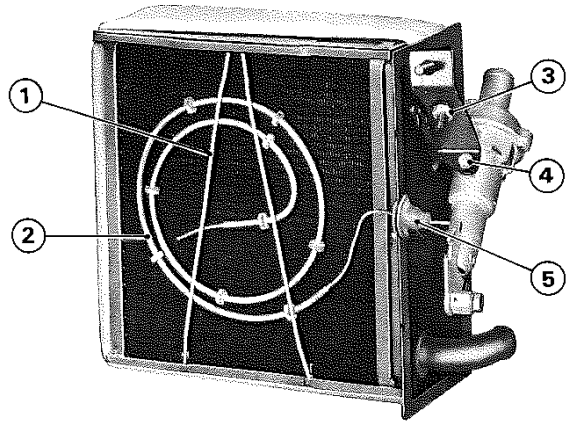

REPLACING THE THERMOSTATIC TAP

Dismantling

- Drain the cooling system leaving the heating tap wide open.
- Disconnect the tap control and the tubes.
- Remove, the radiator/tap assembly.
- Remove tube **2** and support **1**
- Unscrew the nut **3**
- Unscrew and remove the bolt **4**
- Unscrew and remove the two tap fastening bolts
- Remove the rubber grommet **5** from the closing plate.
- Remove the tap/tube assembly.

IMPORTANT

Correctly rinse the heater radiator and check its condition.

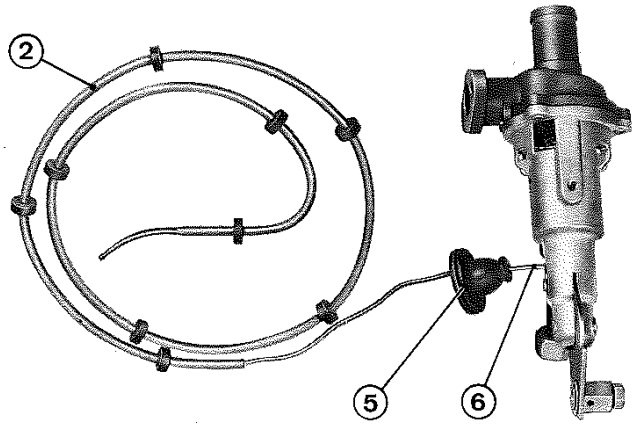

Condition

The tap/tube assembly (P.N 6461.20) is delivered packed to avoid any deformation of the capillary tube **6** linking the tube **2** to the tap.

In no case, must the shape of the capillary or the tube be changed so that the welding will not be broken. Furthermore any deformation of these parts would systematically result in a change in the heater setting characteristics.

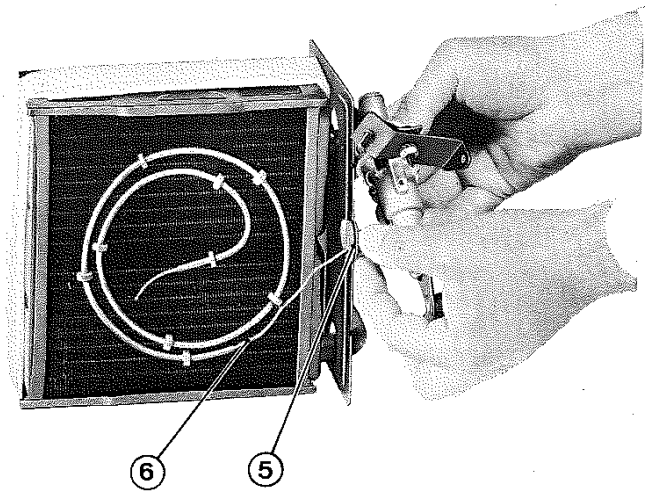

Refitting

- Re-fit the tap clamp joint, smear it with Hermetic and place it against the radiator clamp.
- Slide the tap clamp under the closing plate fastening brackets at the same time fitting the rubber grommet into the groove on the plate.
  Make sure that the capillary tube does not bend.
- Screw in and tighten the 2 tap clamp fastening bolts on the radiator and also the bolt **4**.
- Tighten the nut **3**.
- Fit the tube support **1** on the radiator.
- Re-fit the radiator in the heater.
- Reconnect the tap control and the tube.

IMPORTANT

Fill the cooling system and make sure the heating is working properly.

404 SALOONS WITH SLIDING ROOF

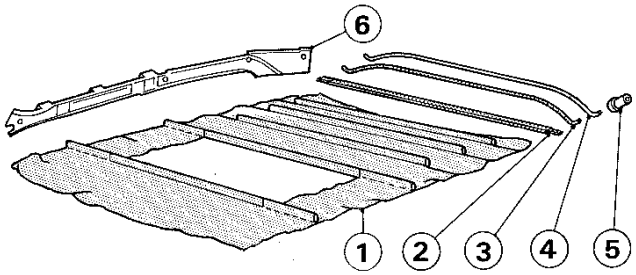

1st Fitting

3 seam roof headlining

1 - Roof headlining : Beige 552 or grey 549

2 - Tension blade

3 - Tension rod

4 - Rear tension rod

5 - Rod and blade plastic fittings (6 fittings)

6 - Inner lateral roof stick

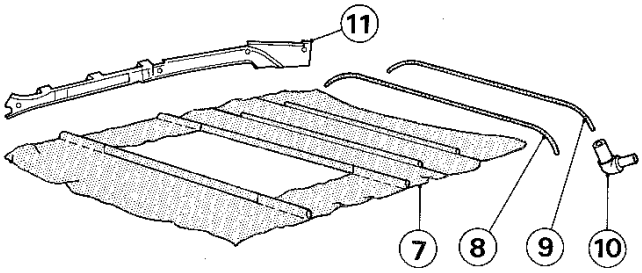

2nd Fitting

From serial numbers :

404	- 4 471 968
404 J	- 4 529 034
404 KF	- 4 561 309
404 D	- 4 601 227

2 seam roof headlining

Modified parts :

7 - Roof headlining : Beige 552 or Grey 549

8 - Tension rod

9 - Rear tension rod

10 - Tension rod plastic fittings (4 fittings)

11 - Inner lateral roof stick

BODYWORK
ROOF HEADLINING

404 SALOONS WITH SLIDING ROOF

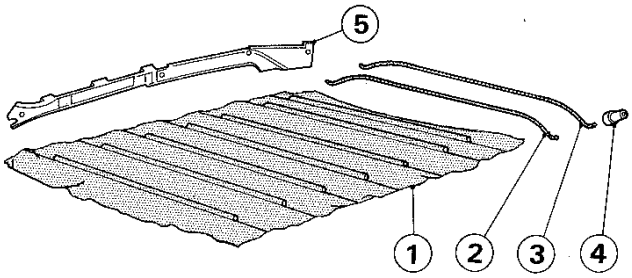

1st Fitting

7 seam roof headlining

1 - Roof headlining : beige 552 or grey 549

2 - Tension rods (6 rods)

3 - Rear tension rod

4 - Tension rod plastic fittings (14 fittings)

5 - Inner lateral roof stick

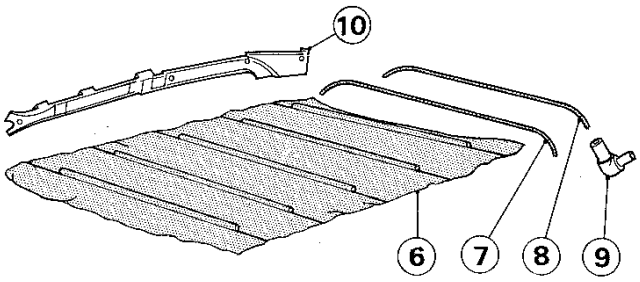

2nd Fitting

From serial numbers :

404	- 4 471 968
404 J	- 4 529 034
404 KF	- 4 561 309
404 D	- 4 601 227

5 seam roof headlining

Modified Parts

6 - Roof headlining : Beige 552 or Grey 549

7 - Tension rods (4 rods)

8 - Rear tension rod

9 - Tension rod plastic fittings (10 fittings)

10 - Inner lateral roof stick.

INTERCHANGEABILITY
404 SALOONS WITH OR WITHOUT SLIDING ROOF

Both models of roof headlinings are interchangeable, provided the tension rods and plastic fittings are replaced, and provided the inner lateral roof sticks are drilled as indicated on drawings below.

1) - Installing a later model roof headlining on 404 models built prior to the above modification :

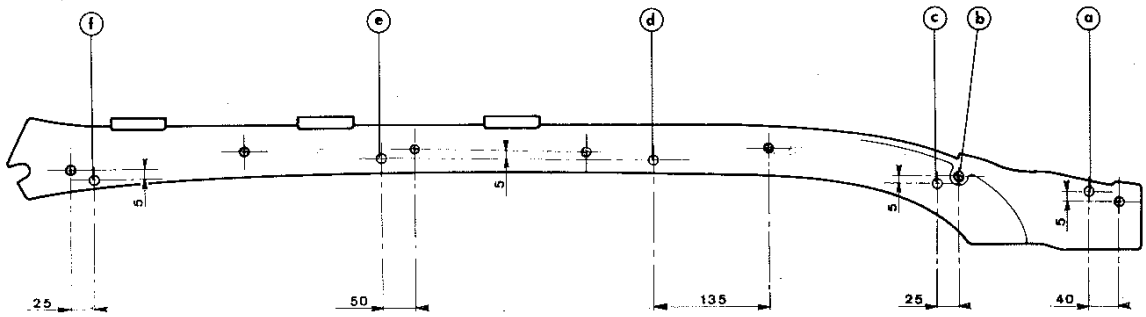

● Existing holes in inner lateral roof sticks

a) 404 with sliding roof :
- Drill a 8.3 mm dia. hole at **a**,
- Use holes **a** and **b** to secure the new tension rods.

b) 404 without sliding roof :
- Drill five 8.3 mm dia. holes at **a, c, d, e,** and **f** ; use these holes to secure the new tension rods.
- The sunshield bracket corners should be rounded off slightly to avoid any risk of cutting into the roof headlining.

2) - Installation of an earlier model roof headlining on a modified hull assembly :

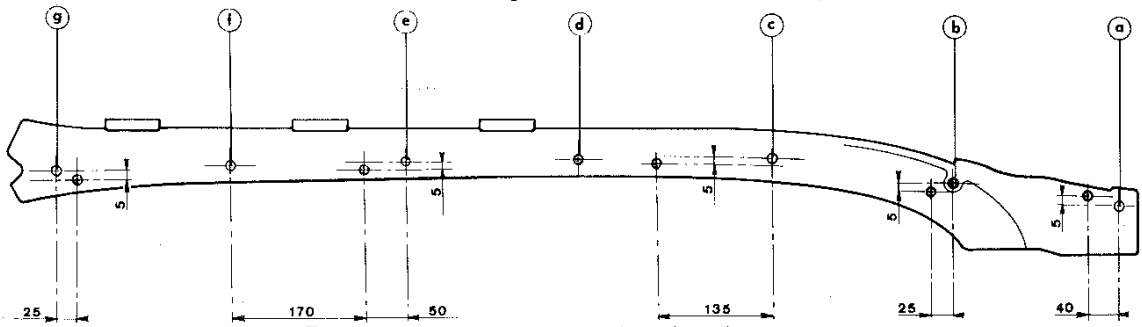

● Existing holes in inner lateral roof sticks

a) 404 with sliding roof :
- Drill two 8.3 mm dia. holes at **a** and **c**.
- Weld three tension blade attachment lugs on the frame of the sliding roof.
- Use holes **a** and **b** for attaching the tension rods, and hole **c** for attaching the tension blade.

b) 404 without sliding roof :
- Drill five 8.3 mm dia. holes at **a, c, e, f,** and **g,** and use these holes, as well as existing holes **b** and **d** for attaching the tension rods saved from the old hull.

404 FAMILY CARS AND STATION WAGONS

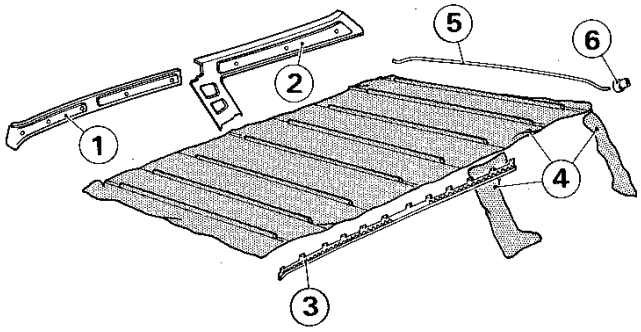

1st Fitting

1 - Inner lateral roof stick

2 - Rear lateral stick

3 - Fastening strip

4 - Roof headlining

5 - Tension rods

6 - Tension rod plastic fittings
- Interior tail gate joint.

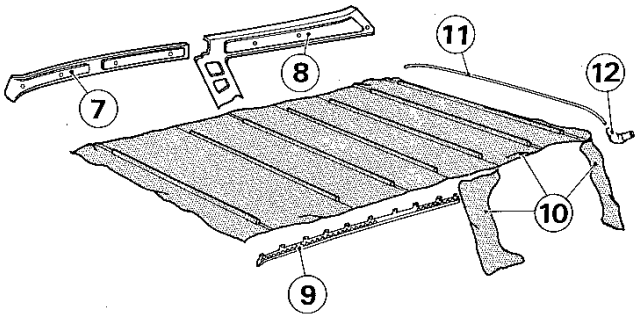

2nd Fitting

From serial numbers :

404 L	- 4 861 669	**404 U6**	- 4 747 822
404 Break	- 4 861 943	**404 U6A**	- 1 925 421
404 LD	- 4 981 349	**404 U6D**	- 4 910 074

the roof headlining has been increased by 15 mm.

Modified parts

7 - Inner lateral roof stick

8 - Rear lateral stick

9 - Fastening strip

10 - Roof headlining

11 - Tension rod

12 - Tension rod plastic fittings
- Interior tail gate joint.

BODYWORK
ROOF - HEADLINING

INTERCHANGEABILITY
404 FAMILY CARS AND STATION WAGONS

Both models of roof headlining are interchangeable provided the tension rods and plastic fittings are replaced, and provided the inner lateral roof sticks are drilled as indicated on the drawings below.

1 - Fitting a 2nd fitting headlining on associated vehicles before this modification.

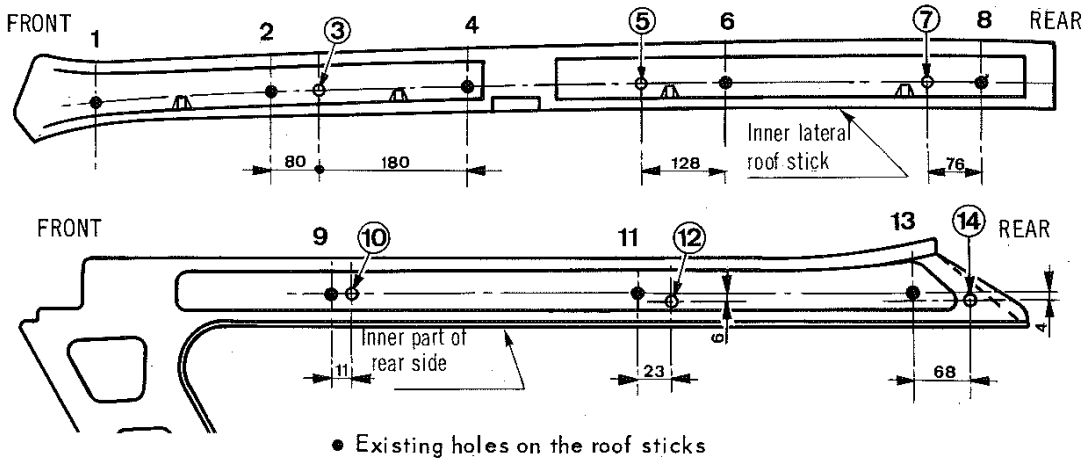

● Existing holes on the roof sticks

- Drill six 8.3 mm dia, holes at **3 - 5 - 7 - 10 - 12** and **14**
- Shorten the strip P.N. 8339.04 by 150 mm at each end.
- The sunshield bracket coners should be rounded off slightly to avoid any rick of cutting into the roof headlining.
- Use the holes **1 - 3 - 5 - 7 - 10 - 12** and **14** to fasten the roof sticks.

2 - Fitting a 1st fitting headlining on a modified body

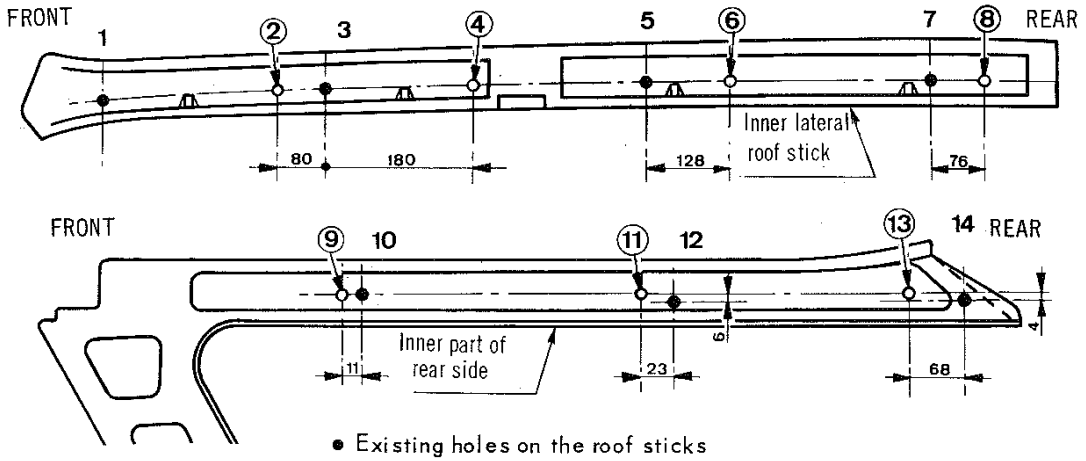

● Existing holes on the roof sticks

- Drill seven 8.3 mm dia. holes at **2 - 4 - 6 - 8 - 9 - 11** and **13.**
- Use the holes **1 - 2 - 4 - 6 - 8 - 9 - 11** and **13** to fasten the roof sticks
- The rear tension bar should be fixed against the rear roof stick by 2 welded brackets instead of being held by the headlining rod support bar n° P.N. 8339.04.

***NOTE** - The rear fastening strip can be replaced by the tail gate interior joint P.N. 8707.10 which equally serves as the rear headlining fastener.*

INSTALLING THE HARD-TOP ON 404 CONVERTIBLES

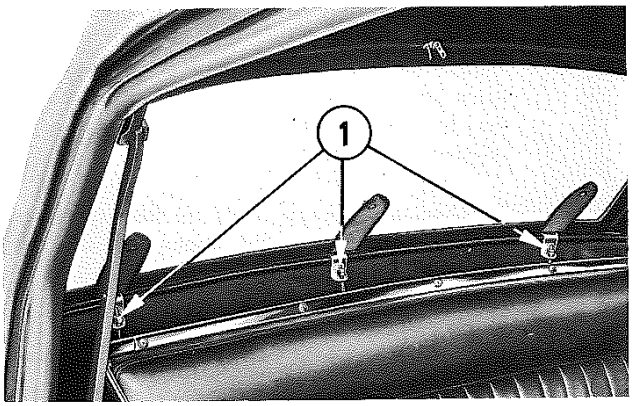

STORING THE HOOD

404 C manufactured before 1967

- Remove attaching nuts **1** for the canvas folding top rear trim strip and disengage the hooks from the corresponding angle plates (up to serial numbers 4.495.599 and 4.590.267, the rear frame is secured by means of the two end-hooks only).

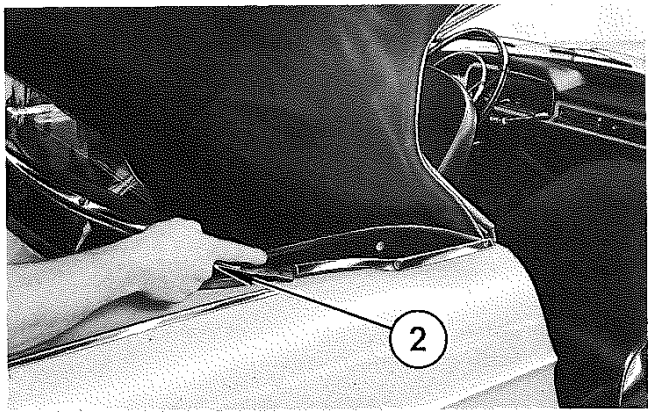

- Unlatch the folding top front fasteners and raise the front part of the folding top to slacken the canvas.

- Release the side snap-fasteners on the rear deck panel and free rear bail **2** by pulling it upwards and backwards.

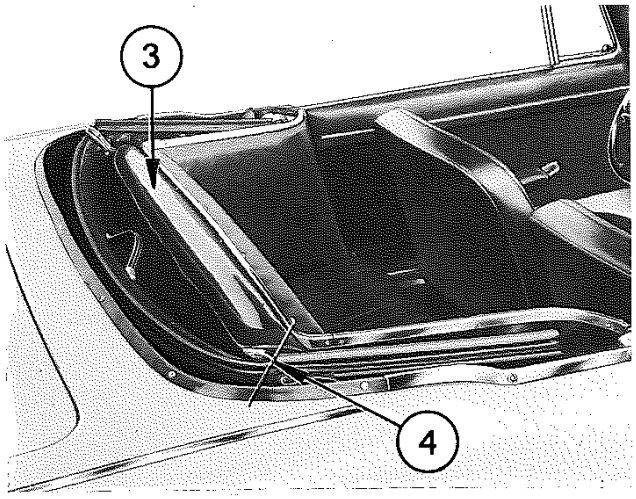

- Store the rear bail in the bottom of the folding top storing recess.
- Tilt the folding top backwards.

For convertibles built prior to serial number 4.495.686 and 4.590.605 :
Fold correctly the rear window transparent panel in the centre of this panel.

For convertibles built after the above-mentioned serial numbers :
Open the rear window slide fastener and lay the transparent panel flat against the backrest of the rear seat, but do not fold the panel.

- Store the folding top correctly in its storage recess. The upper point **4** of the folded top should be level with the rear rim of the car body.
- Fold back the rear window transparent panel and slide fastener assembly **3** over the folded canvas top assembly.

BODYWORK
HOOD - HARD-TOP

FOLDING THE HOOD

404 C manufactured before 1967

- Unlock both left and right top attachments at upper part of the windscreen pillars by pulling the locking handles until the striker is released.
- To open rear window slide zip fastener runner accross the top to the opposite side until completely opened.

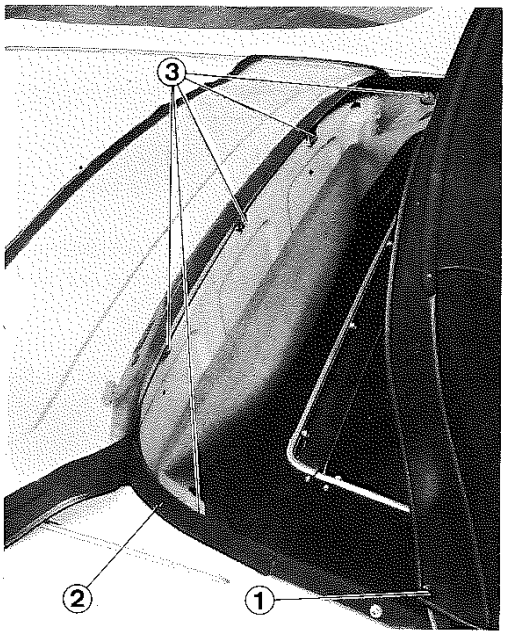

- Release both side snap fasteners 1 left and right, and unfasten rear window and the folding top on each side.
- Clear the rear of the top storage recess by unfastening the Velcro strip 2.
- Slacken all five fixing screws 3 of rear top rim and remove the rear window assembly.
- Install the rear top rim and rear plastic window flat against the bottom of the top storage recess but do not fold the transparent panel.
- Unlatch stretching links of the top rear bail by pulling button upwards.

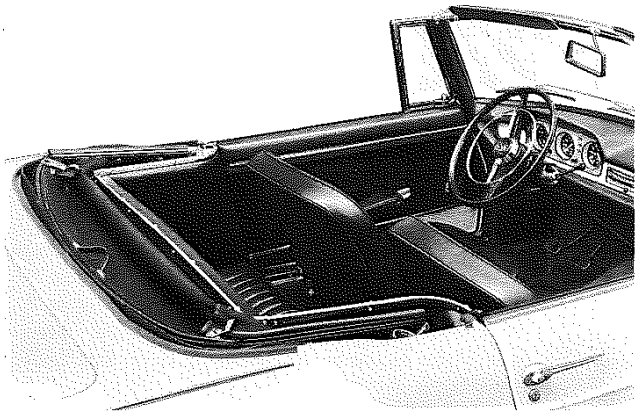

- Fold back the top and arrange correctly in its recess.
- Ensure that the cloth does not get caught up between the metal fittings or body edges.

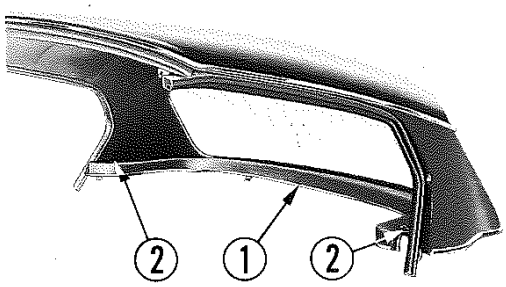

FITTING THE HARD-TOP

Preparing

- Remove rear shelf **1** by removing attachment screws **2** and pulling shelf towards the front.

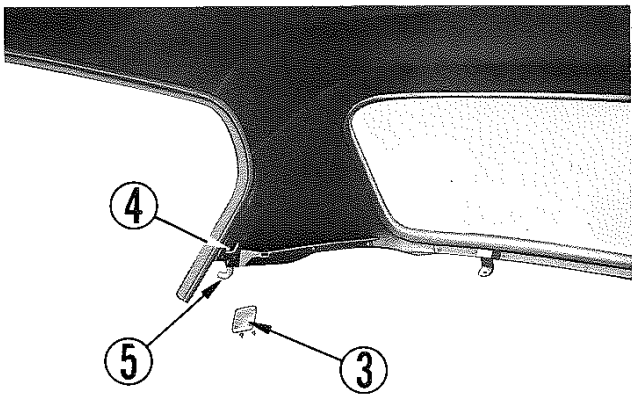

- On either side, remove access plate **3** for nut **4** securing lateral attachment hook **5**.

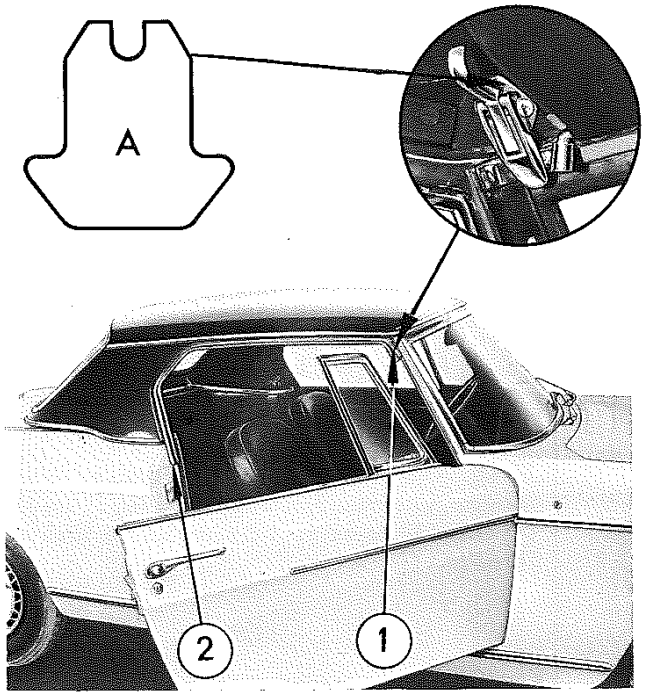

INSTALLING

- Locate the hard-top on the car by positioning front end of seal **1** against windscreen lateral upright, and rear end **2** against the rear edge of the door opening.

- Lock the front crossbar of the hard-top ; blocking spacers **A**, packed in a bag supplied with the hard-top, should be installed under the base plate of the attachment hooks, if required.

  Check the hard-top for proper positioning :

  laterally : the hard-top should be centered correctly ;

  longitudinally : the quarter panel should be recessed by 5mm from the door opening, or flush with this opening.

BODYWORK
HOOD - HARD-TOP

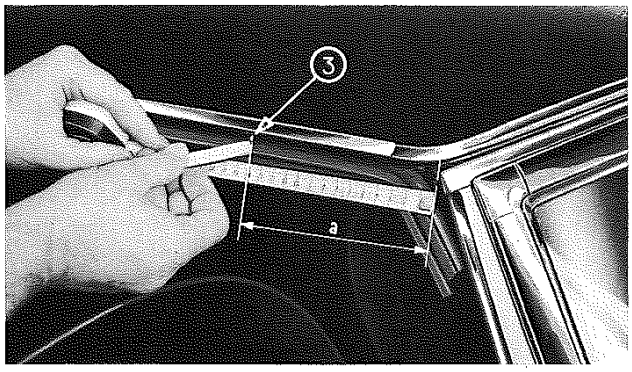

- Using a rule, note the position of the seals with respect to the lateral upright of the windscreen (dimension **a**).

- Unlock the front cross-bar of the hard-top and raise the hard-top slightly.

- Mark and cut-off the ends of the gaskets at dimension **a** from reference **3**, so that the seals press against the lateral uprights of the windscreen.

- Lock the front end of the hard-top.

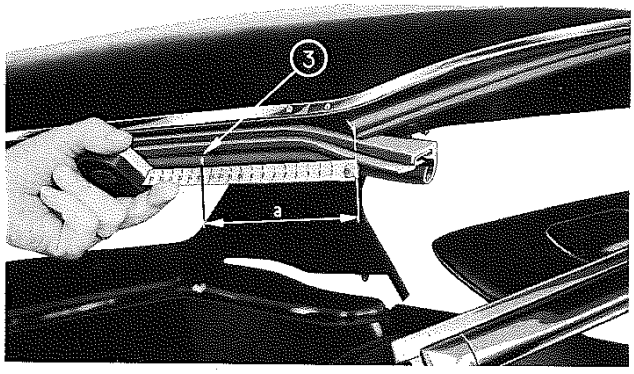

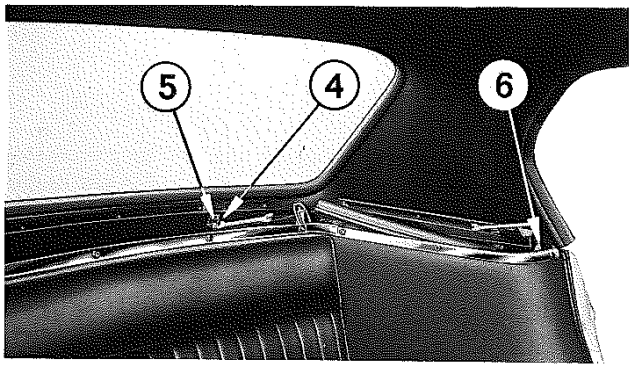

- Engage both lateral hooks **4**, used for attaching the folding top rear end, in rear brackets **5** of the hard-top.

- Engage hooks **4** in the holes of the partition plate and screw in the nuts a few turns. Make sure the hooks bear against the plate and not against the eyes of the canvas-top storage recess.

- Engage hard-top rear plate attaching hooks **6** in rear door stile openings **7** and screw in the nuts a few turns.

- Torque all four attaching hook nuts alternatively to obtain an even gap of about 5 mm in all points between the hard-top outer rim and the hull of the car.

- Cut off the rear end of the seals so that they press against the door stile uprights and door inner trim panels when the doors are closed.

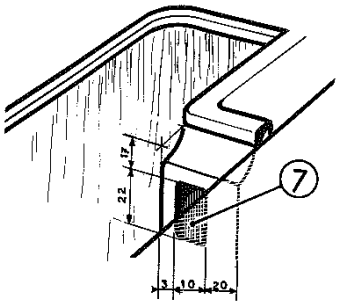

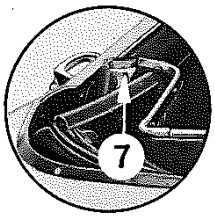

***NOTE** - The early models of convertibles do not include openings **7** ; these openings should therefore be bored as indicated on the drawing opposite.*

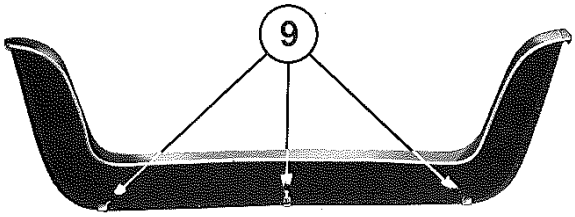

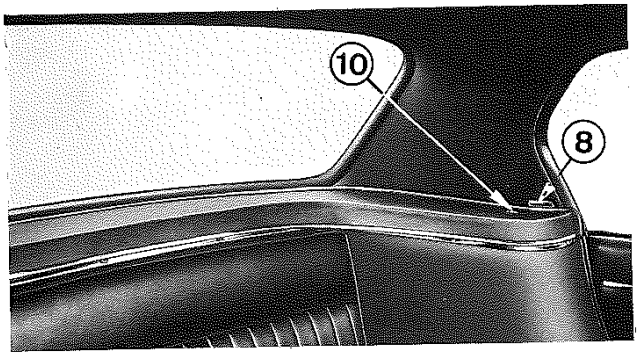

- Secure plates **8**.

- Install the rear shelf by engaging all three rear catches **9** under the hard-top rear angle.

- Torque both front attachment screws **10**.

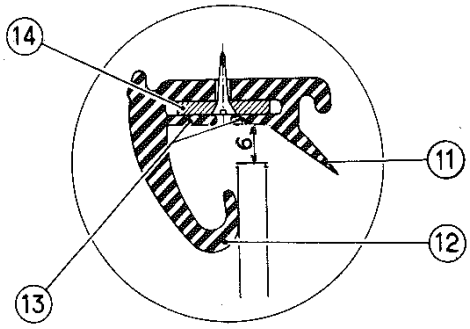

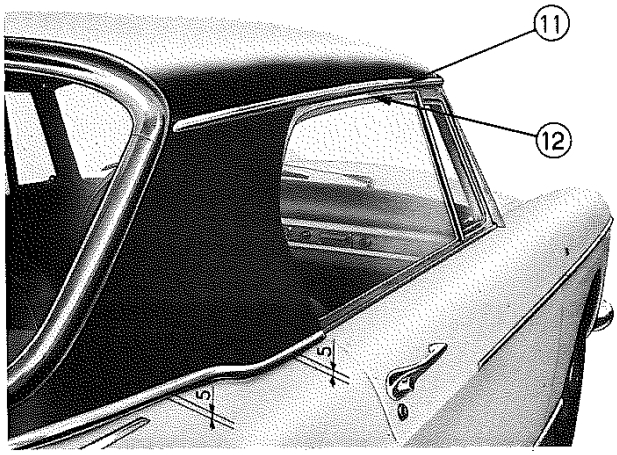

- Check door window glass panel position with respect to the corresponding seals :

  outer lip **11** should cover the glass panel, and the glass panel should press against inner lip **12**.

  If required, spread apart lips **13** covering metal strip **14**, loosen the seal attachment screws slightly and slide the seal laterally until it bears correctly against panel.

- Make sure the seals press correctly over the whole length of the door opening. If a small void remains, fill it up with black putty, bodywork type.

***NOTE** - If, exceptionally, adequate results cannot be obtained by moving laterally, the slant of the door window panel should be adjusted as follows :*

- Remove the upholstery of the door and move the lower ends of the window slides laterally.
- The position of the folding top seals with respect to the new location of the window panels should then be adjusted when re-installing the canvas top.

FITTING ASHTRAYS TO THE REAR DOORS

404 Family cars before 1964 models

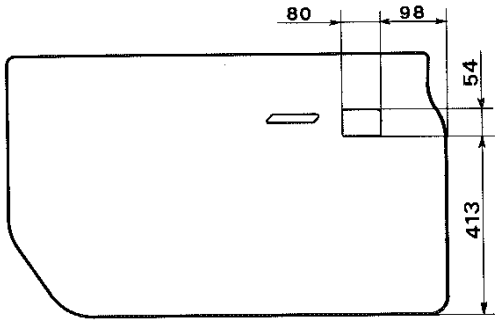

- Remove the window-winder handle, the door handle and the armrest.
- Unclip the lining panel.
- Trace and cut the panel as shown opposite and refit it.

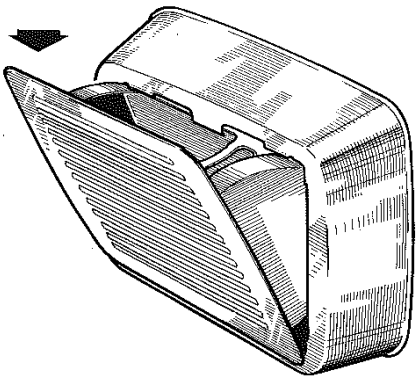

P.N. 8229.13

- Remove the ashtray from its casing : open the ashtray and press on it from top to bottom so that it comes away from the top part of the casing.
- Put the ashtray casing against the lining panel where it has been cut and drill two 2.8 mm dia. holes in the door panel using the casing as a back drilling plate.

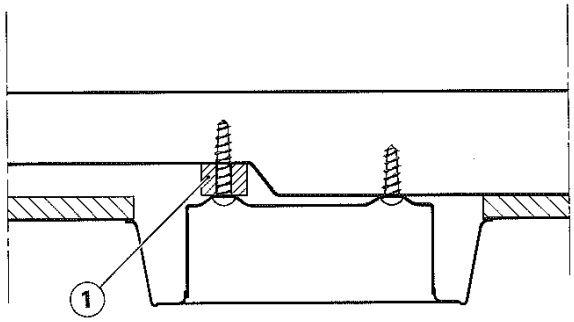

- Fit the ashtray casing to the door panel by a 3,5 × 15 mm screw at the front and a 3,5 × 25 mm screw at the rear, inserting an 8 mm thick spacer between the door panel and the rear casing box.
- Put the ashtray back in its casing.
- Refit the window winder handle, the arm-rest and the door handle.

BODYWORK
DOOR LINING PANELS

FITTING ASHTRAYS TO THE REAR DOORS
404 Saloons before 1966 models

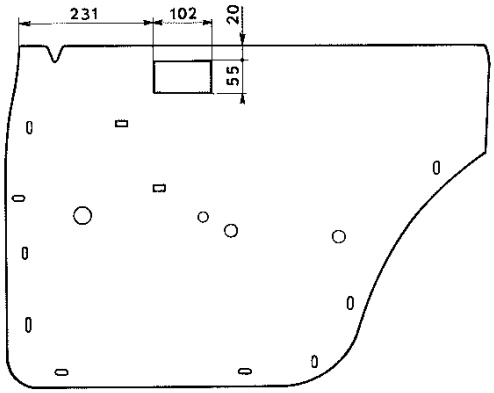

- Remove the window-winder handle, the door handle and the arm-rest.
- Remove the lining panel.
- Trace and cut on the top part of the panel a rectangle of 102 × 55 mm as shown opposite.

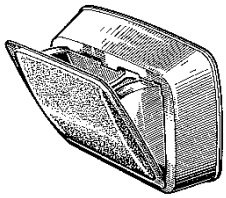

P. N. 8229.17

- Refit the lining panel.
- Remove the ashtray from its casing.
- Put the ashtray casing against the panel where it has been cut and two 2.8 mm dia. holes in the interior door panel, using the casing as a drilling back plate.

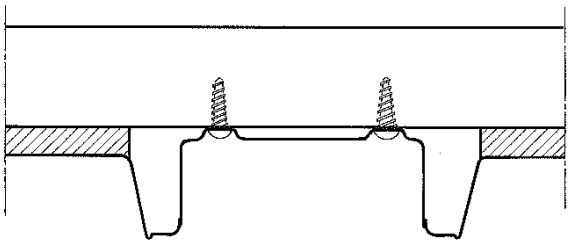

- Fit the ashtray casing by two 3.5 × 15 mm screws.
- Put the ashtray back in its casing.
- Refit the window-winder handle, the arm-rest and the door handle.

ADAPTING FIRST FITTING ARMRESTS ON FRONT AND REAR DOORS

404 Saloons prior to July 1961

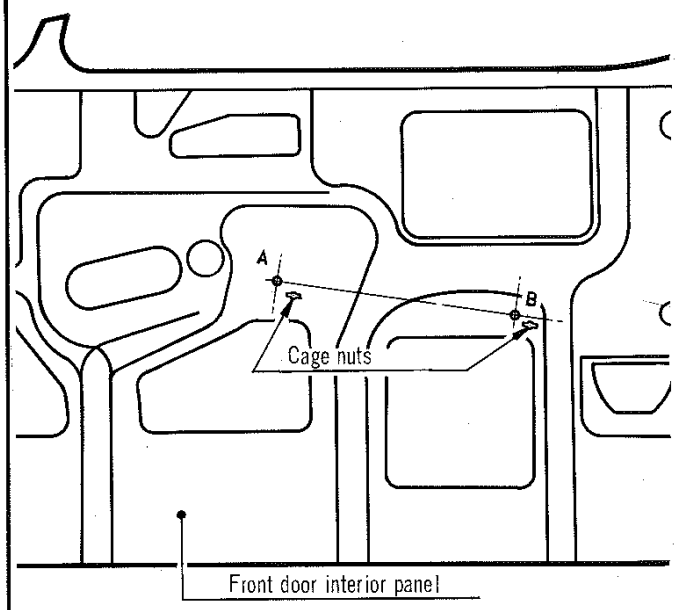

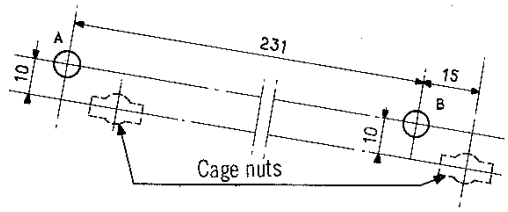

1

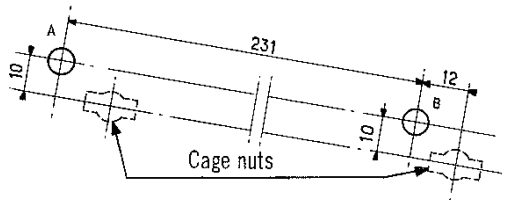

2

As from July 1961 door arm-rests in molded plastic are fitted instead of arm-rests in leatherette.

The fitting of these arm-rests on the door panels is therefore different. Consequently, when replacing a door, the old arm-rest must be fitted in the following way :

- Trace and drill two 6.5mm dia. holes at A and B as shown opposite.
  - N° 1 for front doors
  - N° 2 for rear doors.
- Weld two 6 × 25mm dia. bolts in these holes.

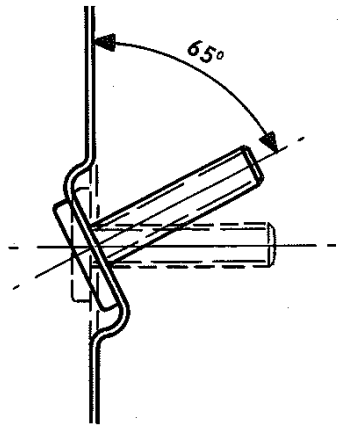

- Heat with a blow torch a sufficiently large area around the bolts so that they can be moved upwards as shown opposite.
- Refit the lining panel
- Fit the handles
- Fit the armrest.

LUBRICATION AND MAINTENANCE

14

LUBRICATION AND MAINTENANCE

OILS

14 01 01

RECOMMENDED LUBRICANTS

All 404 models

TYPE OF VEHICLE	ENGINE			GEARBOX			DIFFERENTIAL				
	Capacity	Quality		C3	BA7	Quality	WORM AND WHEEL		HYPOID		
		Petrol	Diesel	Capacity	Capacity		Capacity	Quality	Capacity	Quality	
404 Saloons - all models 404 Convertibles - Coupés (95.25 differential)	All models : 7 pints (4 l.)	All the year round ESSO EXTRA MOTOR OIL 20W/30/40 or ESSO UNIFLO every 3,000 miles (5,000 km)	ESSO MOTOR OIL SAE 30 for normal ambient temperatures ESSO MOTOR OIL SAE 20 in prolonged periods of cold every 1,500 miles (2,500 km)	All models : 2.18 pints (1.25 l.) every 6,000 miles (10,000 km)	All models : 2pts (1.15 l.) every 6,000 miles (10,000 km)	All models - All the year round ESSO EXTRA MOTOR OIL 20W/30/40 or ESSO UNIFLO Every 6,000 miles (10,000 km)	2.45 pts (1,4 l)	WORM & WHEEL DIFFERENTIAL ESSO GEAR OIL VT Every 6,000 miles (10,000 km)		HYPOID DIFFERENTIAL - All models - All the year round ESSO GEAR OIL GP 90 (Every 18,000 miles (30,000 km)	
404 Saloons - all models 404 Convertibles - Coupés (101.6 differential smooth case)							3 pts (1,7 l)				
404 Saloons - all models 404 Convertibles - Coupés (101.6 differential ribbed case)							2.45 pts (1,4 l)				
404 Family Cars and Breaks (Worm and wheel differential smooth case)							2.8 pts (1,6 l)		2.45 pts (1,4 l)		
404 Family Cars and Breaks (Worm and wheel differential - ribbed case)							2.45 pts (1,4 l)				
All light lorries											

The lubrication of the different components must be effected according to the indications given below, using only ESSO lubricants.

Recommended Lubricants

- Steering gear
- Front hubs
- Pressure greasing of the mechanical assembly

} ESSO MULTIPURPOSE GREASE H

- Mechanical components
- Bodywork

} ESSO HANDY OIL with an oil can

General Recommendations

- Running in lubrication - ESSO UPPER MOTOR LUBRICANT
- Antifreeze - PEUGEOT or ESSO
- Washing products - MANET, EXAGON, PAIC, OMO, ERGANOL.

Oil Filter

The filter with replaceable element, situated on the L.H. side of the engine must be removed and cleaned, the paper element being replaced at 600 miles, 3,000 miles, 6,000 miles then every 6,000 miles (1,000 km, 5,000 km, 10,000 km).

CAPACITIES

Engine	7 pints (4 litres)
Oil bath air filter	200 c.c.
Gearbox	C.3 - 2.18 pts (1.25 l.) - BA7 - 2pts (1.15 l.)
Differential	2.45 pts (1.4 l.) or 3 pints (1.7 l.)
Brake hydraulic system	650 c.c.
Clutch system	55 c.c.
Fuel tank	as from 1967 model - 12 gals. (55 l.) in place of 11 gals. (50 l.)
Cooling system	13.65 pts. (7.8 l.)

AIR FILTER

If the air filter is not cleaned regularly it will become clogged and result in a loss of power and an increase in fuel consumption.

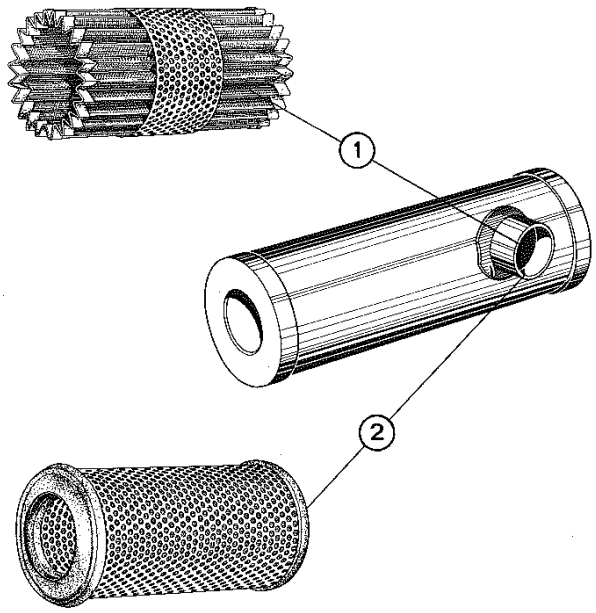

DRY AIR FILTER

Cleaning every 6,000 miles (10,000 km)

- COTTON ELEMENT
  Clean it by tapping it lightly or blowing with an air line after dismantling.

- POLYPROPYLENE ELEMENT
  Clean it by repeated dipping in a mixture of 80% diesel fuel and 20% engine oil. Refit after draining.

Replacement every 12,000 miles (20,000 km)

a - Cars manufactured prior to October 1967 :
Fit a cotton element (1) L 697 or L 745 (P.N. 1445.10)

b - Cars manufactured after October 1967 :
Fit a polypropylene element (2) L1274 a (P.N. 1445.30).

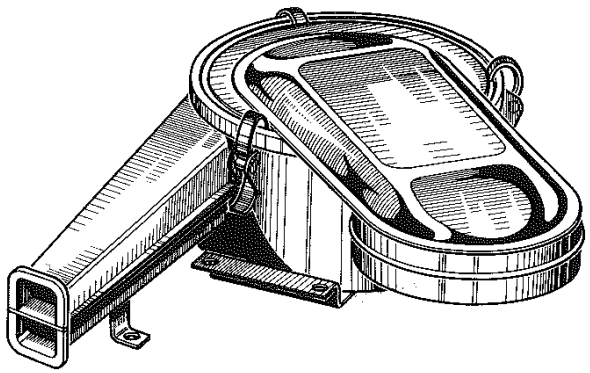

OIL BATH AIR FILTER

Cleaning every 3,000 miles (5,000 km)

Clean the bowl and refill with 200 c.c. of engine oil.

Rinse the element in diesel fuel and refit after draining.

LUBRICATION DIAGRAM OF THE MECHANICAL COMPONENTS

LUBRICATION DIAGRAM (BODYWORK)

WINTER PROTECTION

Cooling system

The anti freeze must be changed each year observing the following :

- **When the freezing period is over :**
  drain and flush the radiator.

- **At the end of summer :**
  After draining and flushing the radiator carefully, refill using the correct amount of Peugeot or Esso antifreeze.

Anti freeze (1 litre cans)	Protection of 404 petrol engines down to :
1	13° F (- 5° C)
2	10° F (- 12° C)
3	- 6° F (- 21° C)
4	- 31° F (- 35° C)

- **During the winter :**
  Check the anti freeze water mixture, using an ESSO or MOHICAN "anti freeze tester".

Battery

It is advisable, at the beginning of winter and periodically during the use of the vehicle, to check the condition of the battery charge.

The density corresponding to full charge of the battery is 31 to 32° B at a temperature of 50° to 59° F (10 to 15° C). If it is below 27° B recharge the battery.

A battery which is kept fully charged is virtually immune to freezing.

Windscreen Washer

It is essential that the reservoir be filled with a mixture of water and a neutral solution such as "STOPGEL".

The label on the product container indicates the amount to be used.

Door and luggage boot lid seals

Only use glycerine, applied with a brush, on the seals to prevent them tearing.

The use of brake fluid is strictly forbidden as it will attack the paintwork.

Door handles and knobs

A few drops of glycerine will prevent them from freezing.

Steps to be taken to prevent rusting.

During winter the roads are often covered with chemical products or salt and despite all the precautions taken during production, the build-up of salt, etc, under the wings will corrode and even pierce the metal after a short time.

To avoid this the under side of the car should be washed frequently, and thoroughly, particularly under the wings and the floor.

After thoroughly drying the car, a coat of paint such as "chassis black" can be applied to the bared parts of the under side of the car, taking the same precautions as for normal paint.

The bumpers and wheel trims also risk being pitted by the same products.

If abundant washing and drying with a chamois leather is not sufficient to remove the traces of oxydation, polishing with a commercially available product should be effected.

CLEANING THE UPHOLSTERY

Cloth upholstery

Isolated stains :

These can be removed using **F** petrol or cleaners methylated spirit. Trichlorethylene or ordinary petrol must not be used as they will damage the cloth and render it non elastic.

All other methods are to be avoided as indelible stains will appear on the seat covers.

Cleaning and brightening up of the upholstery :

Washing of the seat covers is possible, but necessitates stripping and re-upholstering which is expensive and difficult.

"Dry plastic foam" cleaning products are available on the market, which mix with water, and which, after a thorough dusting of the surfaces to be cleaned, are applied with a special sponge, supplied with the product, eliminate the soiling and localised stains.

Leather upholstery

We recommend periodic and thorough wiping with a soft cloth, dipped in warm soapy water, followed by a rinsing (use a mild non caustic soap).

The leather should then be thoroughly dried and polished with a soft dry cloth.

Avoid using rain water.

Do not employ polish, petrol, detergent or cream for leather as these products contain solvents which may stain the leather.

Leathrette upholstery

This can be washed with a sponge lightly dipped in soapy water (Manet, Exagon, Paic, Omo, Erganol, etc...) or in difficult cases using petrol. Trichlorethylene must not be used.

The finish of leatherette being semi mat it is not advisable to try and give it a brilliant appearance using a wax base product or any of the other products available on the market. Its semi mat finish can be restored by simple wiping with a dry cloth.

CLEANING THE BODYWORK

Washing :

Although the washing of the car is a simple operation, some precautions are necessary :

- Remove the mud using a lot of water.
- Use two sets of sponges and chamois leathers ; one for the bodywork, the other for the wheels and parts which may be greasy.
- Clean the car with a well rinsed sponge, then dry it with a clean, wrung out chamois leather.
- Do not use a strong jet of water.
- Do not wash the car outside in bright sunlight or in very cold weather.
- Do not mix paraffin with the water as this will tarnish the paintwork.

Polishing :

Any commercially available product can be used.

Sun roof :

Make sure that the rubber drainage tubes are not blocked.

Unblock them using a compressed air line.

Windows :

They can be cleaned, using an appropriate aerosol spray.

Wipe with a clean dry cloth.

Clean the windscreen wiper blades.

PLASTIC ACCESSORIES

The plastic or plexiglass accessories can be cleaned with soapy water.

Trichlorethylene, tar remover or similar products must not be used.

PEUGEOT

APRÈS-VENTE

Service Bulletin n° 686

June 1969

15 - GENERAL

404 Workshop Manual

Enclosed is a copy of the 404 WORKSHOP MANUAL, ref : 1272 E, with removable pages, which replaces the 404 brochures, reference 472 E and 872 E.

Due to the delay necessary for its preparation, this manual does not include the modifications applied to the 404 model since the beginning of 1968.

The pages bringing up to date this document, as well as the classes 12-13-14 and 15, will be distributed progressively as they are published.

Printed in France

404 WORKSHOP MANUAL

Ref. 1272 E.

ADDITIF N° 4

This supplement supercedes :

Group 1 in total

In addition, it contains new summary pages for groups 10 - 12 - 13 - 15.

In order that this supplement can be inserted in the manual, remove the following sheets :

Group	Sheets	Description
10	05 01	Wheel nuts
	06 01	Hub caps
12	04 01	Ignition
	04 03	
	04 05	
13	07 01	Front wings
	08 01	Bumpers
	23 01	Hard-top (Convertible)
	23 03	
	23 05	
	25 01	Door trim panels
	25 05	Door armrests
14	In total	
15	03 01	Tightening torques
	03 03	

Insert this page behind the group index.

Printed in France

11-77

404 WORKSHOP MANUAL

Ref. 1272 E

3rd. SUPPLEMENT

Class 14 and 15 completing the existing workshop manual.

Printed in France

404 WORKSHOP MANUAL

Ref. 1272 E

2nd. SUPPLEMENT

Class 12 and 13 completing the Workshop Manual.

10-70 *File this page behind the class index*

Printed in France

404 WORKSHOP MANUAL

Ref. 1272E

1 st. SUPPLEMENT

This supplement supersedes the following pages :

Class 8 - Summary

NEW PAGES

Class	Pages	Modifications
8	Summary	To be filed behind the separator 8.
	08 01 to 08 03	Reconditioning of the tandem master cylinder (export vehicles).

12-69

File this page behind the class index

Printed in France

TOOLS AND GENERAL

15

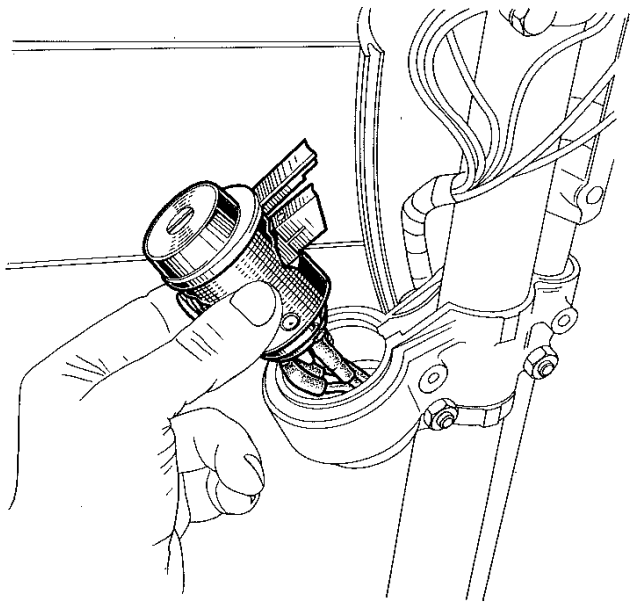

NEIMAN ANTITHEFT LOCK

The Davauto ignition switch, mounted on the steering column, can be replaced by a Neiman antitheft-ignition switch.

Follow the Manufacturer's instructions for fitting.

Wiring :

Lead 13 and 20 to the positive (+) terminal (30)
Lead 32 to the terminal B (15)
Lead 46 to the terminal D (50)

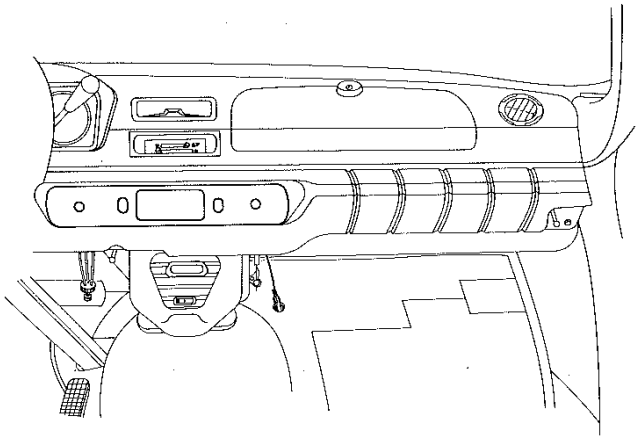

FITTING A CAR RADIO

- The mounting for the car radio is envisaged in the centre of the dashboard

Preparation

- Protect the wings, the front seats and the steering wheel
- Disconnect the battery
- Remove :
  - the cardboard under the dashboard
  - the side panel lining
  - the front of the heater
  - the central trim.

Fitting the radio

Radiomatic, Arel or Philips radios, fit in the cut away in the dashboard.

- Position and secure the radio.
- Fit the central trim for the radio or cut one from the original.
- Connect the feed wire to fuse n° 2
- Refit the accessories.

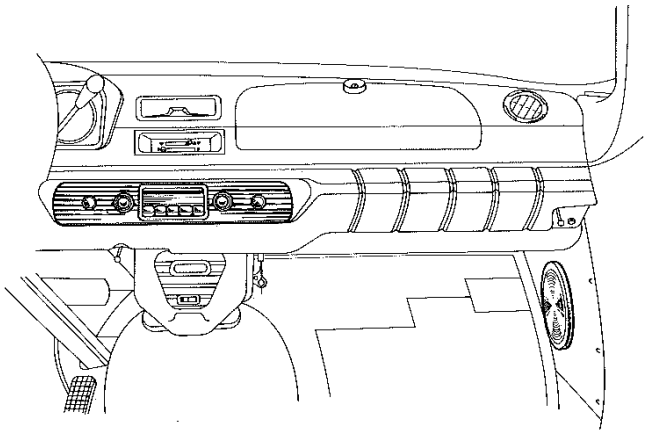

Fitting the Loudspeaker

- Place the loudspeaker on the side panel with the skirt between the hull uprights.
- Cut out the side panel (inner diameter of the speaker).
- Secure the loudspeaker on the side panel
- Connect the leads to the radio.
- Reposition the side panel.

Stereo

Certain radios are equipped with two loudspeakers. The second one should be fitted on the rear shelf.

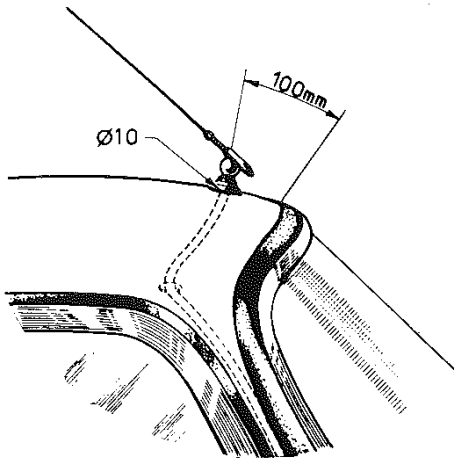

FITTING THE AERIAL

Roof aerial

- Remove :
  - the rear view mirror
  - the right hand sun visor
  - the right hand windscreen frame lining
  - the windscreen.
- Unstick the roof lining along 2/3 of the windscreen frame.
- Mark the exact centre of the roof and drill a hole.
- Bore the metal around the hole.
- Fit the aerial.
- Pass the lead along the roof and down the right hand side of the windscreen frame.
- Connect the battery and check the radio.
- Restick the roof lining in place.
- Fit the windscreen and the accessories.
- Fit the condensors.

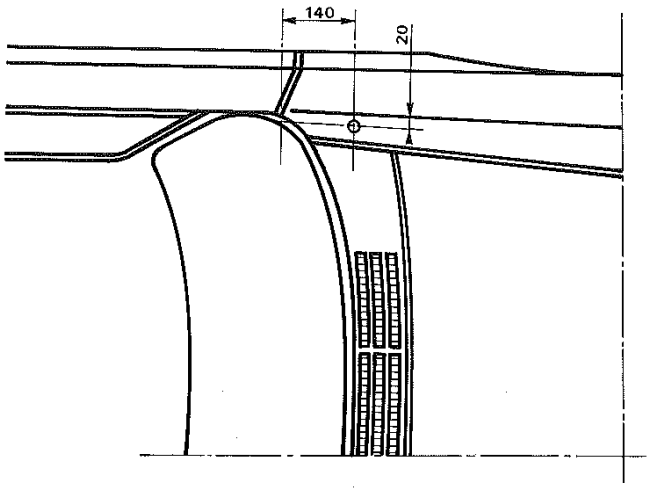

Wing aerial

Wing mounted aerials are available for the 404. Take extreme care when measuring for the drilling.

- 140 mm from the door on the top of the wing.
- 20 mm from the air intake panel joint.
- Drill the wing and the frame of the air intake panel to the diameter given by the manufacturer.

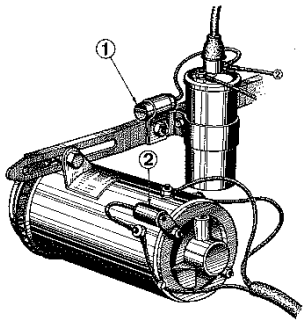

SUPPRESSING

I - Car radio operating on amplitude modulation ranges.

Car with dynamo fitted

- Condensor **1**, with a capacity of 0.50 μ F, connected to the terminal for lead **2** (input) on the coil.
- Condensor **2**, with the same capacity, connected to the terminal for lead **7** (output) on the dynamo.

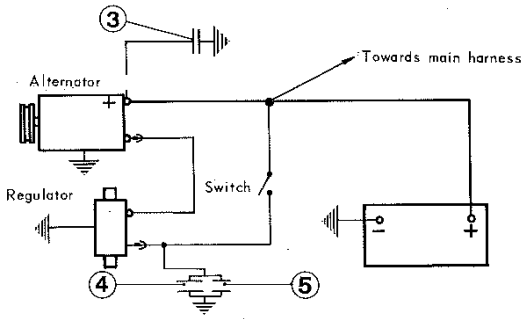

Car with alternator fitted

All that is required is filtering of the + polarity:

- Fit a condensor, **3** of **3** μ F between the + terminal of the alternator and earth.
- Fit a group of condensors, **4** and **5**, between the "battery" terminal of the regulator and earth :
  4 — 50 microfarads (μF)
  5 — 10,000 picofarads (pF)

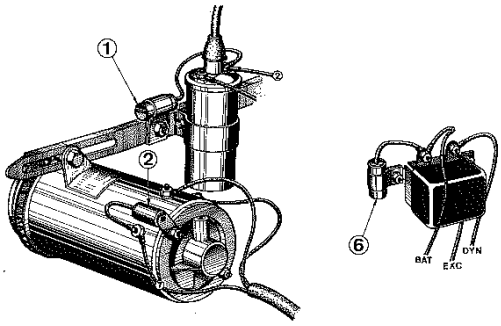

II - Car radio operating frequency modulation ranges

Car with dynamo fitted

Preceding fitting, plus :

- A condensor **6** connected to the "battery" terminal of the regulator.
- A coreless freespiral winding.

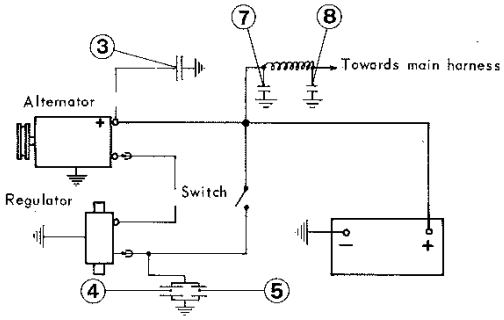

Car with alternator fitted

Preceding fitting, plus :

- An air resistance (F.A.C.O.N. ref. A625) in the **radio feed).**
- Fit a condensor **7**, of 1.000 μ F, on the input side and a condensor **8**, with a capacity to be determined by the interference (0.5 - 2 - 50 or 1,000 μ F) on the output side, radio side).

N B - Secure the condensor casing earths carefully.
- Fit the condensors recommended by the radio manufacturer .
- Never fit a condensor on the "Exc" terminals of the dynamo or regulator.
- Check the operation of the radio with the engine running and the bonnet closed.

FITTING OF SAFETY BELTS

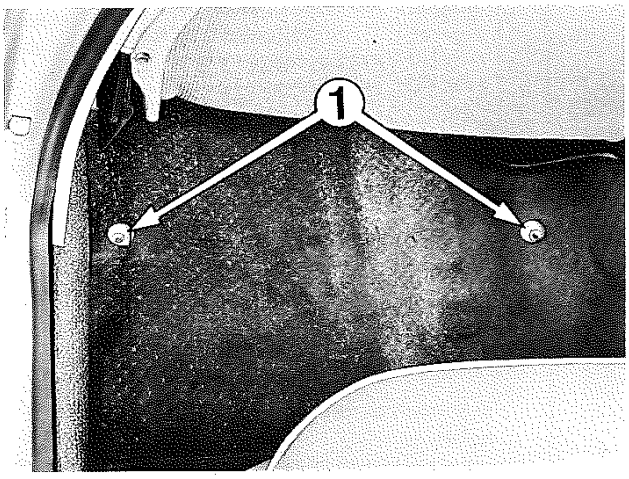

FRONT FLOOR - 404 ALL MODELS

As from serial numbers :

404	- 4 444 551
404 J	- 4 528 648
404 KF	- 4 559 550
404 C	- 4 497 302
404 C.KF	- 4 592 574
404 D	- 4 600 404
404 L	- 4 842 482
404 LD	- 4 977 658
404 U6	- 4 726 040
404 U6D	- 4 905 603

The front floor is reinforced and incorporates four theaded safety belt anchorage points.

1 - 7/16" diameter nuts (11,11 mm)
pitch : 20 per inch (1,27 mm).

TOOLS AND GENERAL
ACCESSORIES

METHOD OF REINFORCING THE FLOOR FOR THE ADAPTATION OF SAFETY BELTS

404 Saloons and Associated vehicles (manufactured prior to the above serial numbers)

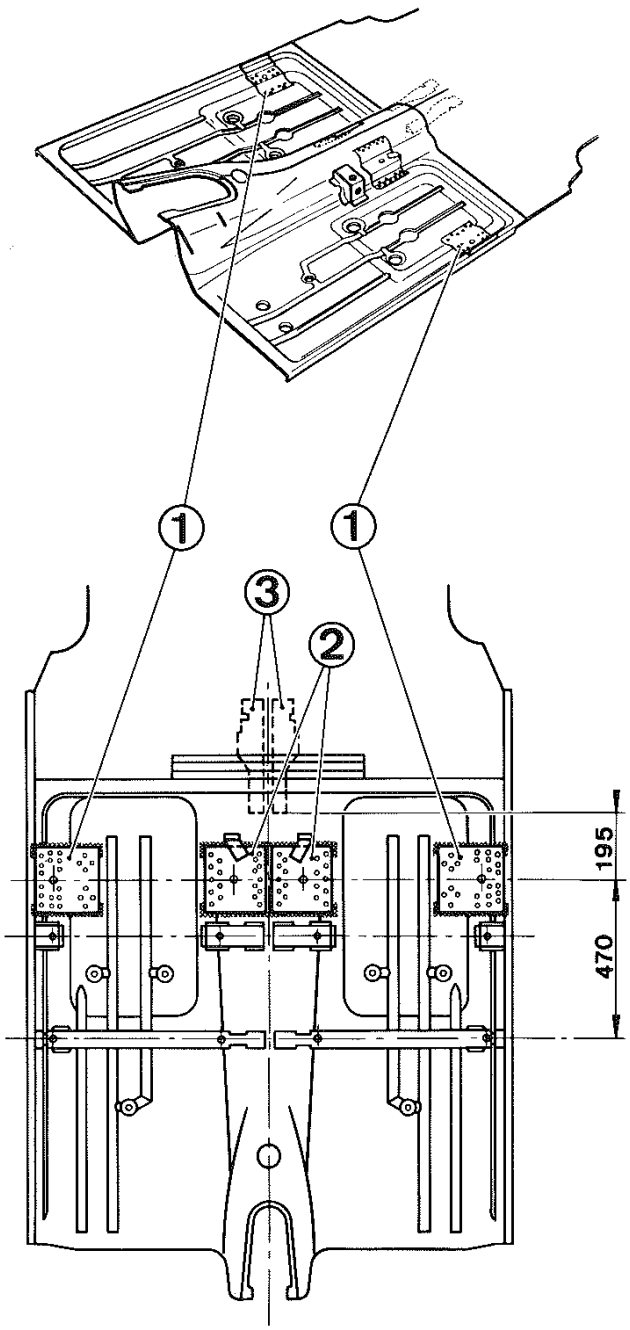

Parts required :

- 2 lateral reinforcement plates
- 1 central L.H. reinforcement plate
- 1 central R.H. reinforcement plate
- 1 rear L.H. reinforcement plate
- 1 rear R.H. reinforcement plate

} special order

- Remove the front seats and the rear seat cushion, the mats and the soundproofing from the floor.

- Drill as shown opposite :

  - the lateral plates 1 with twenty four 7,5 mm. holes,

  - the central plates 2 with eighteen 7,5 mm. holes,

to enable their welding with a blow torch.

- Position and weld the plates 1 and 2 so that the anchorage points are 470 mm. from the axes of the front seat supports.

- Position the rear reinforcements 3 under the floor, as shown opposite and weld them.

- Refit the sound proofing, the mats, the rear seat cushion and the front seats.

TOWING ATTACHMENT FOR 404 SALOONS

As from serial numbers :

404 TW - 5 075 001	404 ZF - 8 251 301
404 TH - 5 311 001	404 KF - 8 224 863
404 SL - 5 311 006	404 D - 4 619 853

modification of the rear floor makes it necessary to use a new type of recommended trailer-hitching device.

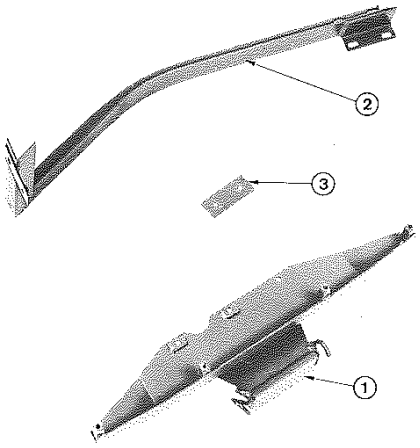

IDENTIFICATION

1 - Angle bracket to be mounted on the rear cross-member of the floor.

2 - Torque-balancing arm to transmit loads to the floor reinforcement plate.

3 - Back-plate.

REMINDER

- Towing capacity :
  - 404 Saloons : 2,645 lbs (1,200 kg)
  - 404 ZF : 2,204 lbs (1,000 kg) on condition that the car is equipped with an additional cooling device for the oil in the transmission (See B.S. n° 620).
  - Maximum towing speed 50 m.p.h. (80 km h).

TOOLS AND GENERAL
ACCESSORIES

FITTING TO 404 SALOONS

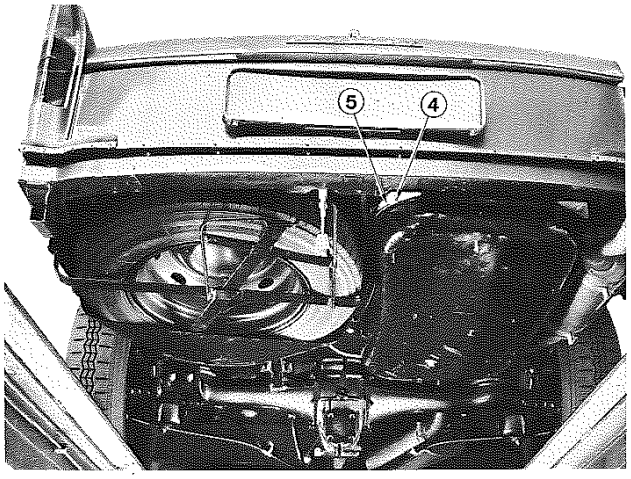

PRELIMINARY STEPS

- Disconnect the licence plate light feed cable.
- Remove the rear bumper.
- Remove fuel tank rear nut 4 and discard the triangular backing plate **5**, since this plate is not used with this installation.

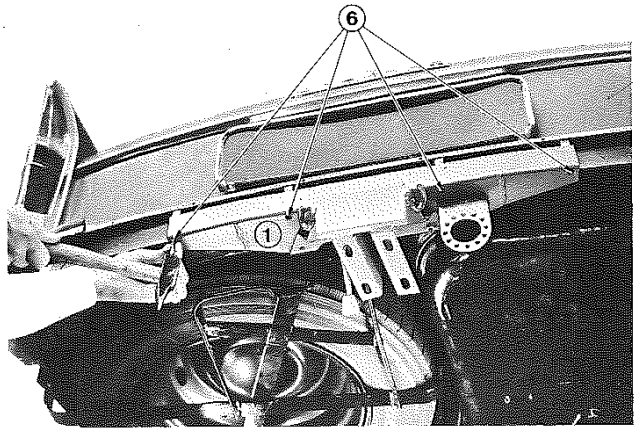

METHOD

- Bring angle bracket **1** in position and secure it by means of the fuel tank rear bolt ; install the corresponding nut.
- Using the four holes **(6)** as template, punch-mark the upper attachment points on the rear panel with a 6,5 mm dia. drift.
- Remove the angle bracket and drill four 8,5 mm dia. holes in the rear panel at the marked locations.
- Re-install angle bracket **1**. Fully tighten nut **4** and also the four 8 mm. dia. bolts in the rear panel.

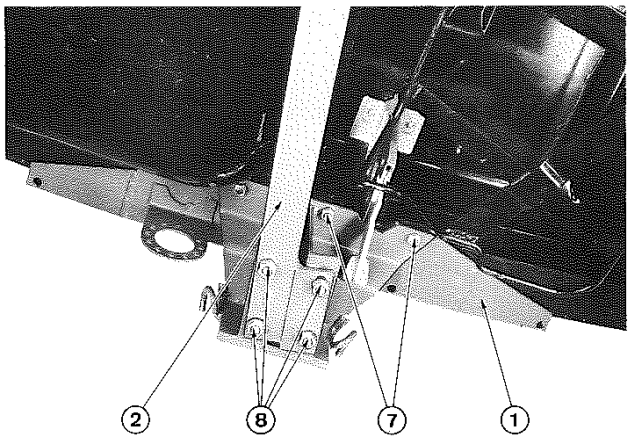

- Remove the spare wheel.
- Use angle 1 as template and drill two 8.5-mm. dia. holes (7) in the side of the rear cross-member.
- Install two bolts in holes 7 and fully tighten them.
- Bring torque-balancing arm 2 in position and secure it to angle 1 by means of four bolts 8 (after removing back-plate 3).

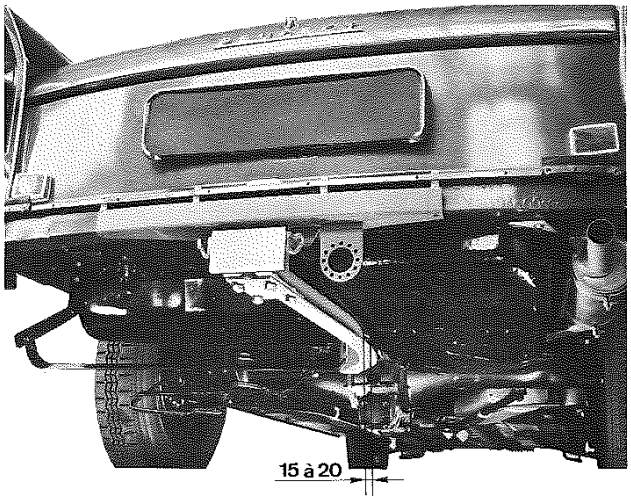

- Locate the vertical section of the torque-balancing arm as follows :
  - Press it upwards against the lower surface of the floor panel,
  - Press it forwards against the floor reinforcement plate.
- Check that the gap between the torque-balancing arm and fuel tank is 0,6 - 0,8 in. (15 to 20 mm).
- Use a C-clamp to hold the torque-balancing arm in the above position.

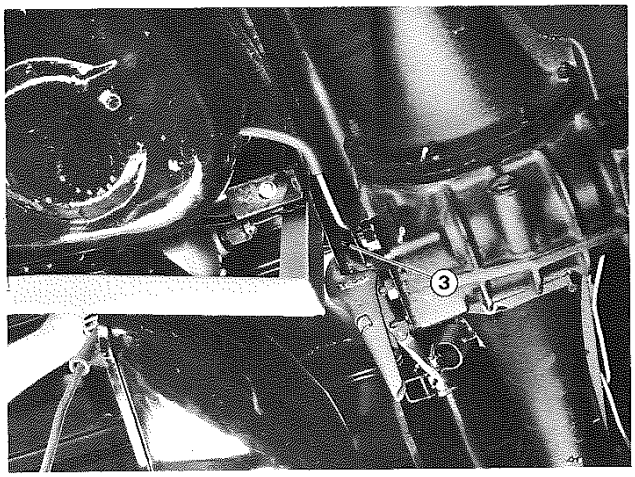

- Drill through the floor reinforcement plate, using the attachment holes in the torque arm as a template.

  (work from the inside of the spare wheel carrier).
- Install back-plate 3 in front of the floor reinforcement plate, then install the 2 front attachment bolts.

TOOLS AND GENERAL
ACCESSORIES

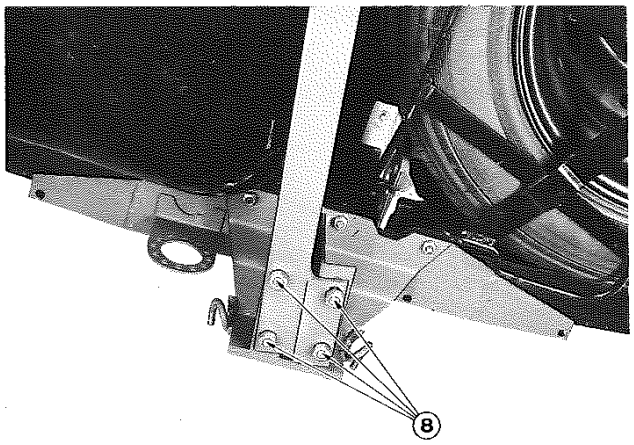

- Fully tighten all 4 bolts (8).
- Re-install the spare wheel.
- Lock and unlock the spare wheel carrier several times in succession to make sure that the spare wheel carrier and lock operate correctly after the trailer hitching device is installed.

- Install the trailer cable harness.
- Install the electrical connector.
- Re-install the rear bumper.
- Re-connect the licence plate lighting cable.

- Retighten all the bolts after the first 1,000 km. of towing.

GENERAL
TIGHTENING TORQUES

COMPONENT	PART	Ft/lbs	M/kg
ENGINE	- Cylinder head bolts (tallowed)	51	7
	- Rocker shaft support bolts	14.5	2
	- Tappet adjustment lock nuts	11	1.5
	- Big end bolts	31	4.25
	- Main bearing cap bolts	55	7.5
	- Crankshaft counter weight bolts	42	5.75
	- Flywheel bolts without reference 5	42	5.75
	- Flywheel bolts with reference 5	49	6.75
	- Crankshaft pulley nut	79.75	11
	- Water pump pulley nut	25	3.5
	- Oil filter bowl bolt	11	1.5
	- Spark plugs	18	2.5
	- Dynamo adjusting bolt	33	4.5
	- Rubber block to front engine support mounting	29	4
	- Rubber block to front engine mounting securing bolts	14.5	2
	- Front supports to crossmember mounting securing bolts	40	5.5
CLUTCH	- Mechanism to flywheel securing bolts	9	1.25
GEARBOX	**C 3 Gearbox**		
	- Bearing to input shaft securing nut	65	9
	- 1st gear pinion nut	40	5.5
	- 4th gear hub to mainshaft securing nut	22	3
	BA7 Gearbox		
	- Locking spring plugs	5.5	0.75
	- Reverse pinion to mainshaft securing nut	40	5.5
	- Rear plate securing bolts	7.25	1
	- H8 × 64 housing bolts	11	1.5
	- H7 × 40 housing bolts	7.25	1
	- Clutch housing bolts	20	2.75
	- Rear housing bolts	11	1.5
	- Drain and level plugs	20	2.75
	- Reverse light switch	9	1.25
	- Gearbox to engine securing bolts (C 3 and BA7)	43.5	6

GENERAL
TIGHTENING TORQUES

COMPONENT	PART	Tightening Ft/lbs	Torque M/kg
PROPELLER SHAFT	- Universal joint bolt (C3) Ø 10 Pretighten	43.5	6
	Ø 10 tighten	7.25	1
	Ø 12 Pretighten	51	7
	Ø 12 tighten	7.25	1
	- Universal joint bolt (BA7)	9	1.25
	- Torque cover to Gearbox securing bolt	25	3.5
	- Torque tube to differential housing securing nuts Ø 10	25	3.5
	Ø 12	40	5.5
DIFFERENTIAL	**Worm and Wheel Unit**		
	- Differential assembly bolts Ø 10	42	5.75
	Ø 11	51	7
	Ø 12	62	8.5
	- Thrust plate bolts	9	1.25
	Hypoid unit		
	- Pinion nut	204	28
	- Differential assembly nuts	51	7
	- Thrust plate bolts	5.5	0.8
	- Housing nuts and bolts	25	3.5
	- Axle housing to differential securing nuts	13	1.8
	- Hub carrier nuts	9	1.25
FRONT AXLE	- Hub nut Pretighten	22	3
	tighten	7.25	1
	- Front triangle assembly nut	25	3.5
	- Rear arm to crossmember mounting	62	8.5
	- Front arm to yoke mounting	58	8.
	- Steering swivel ball joint nut	33	4.5
	- Ball joint sealing nut	5.5	0.75
	- Anti-roll bar nut	33	4.5
	- Upper shock absorber mounting Ø 16 - Elbe nut	40	5.5
	Ø 14 - Collared nut	33	4.5
	- Shock absorber sealing nut	58	8.
STEERING GEAR	- Steering box securing bolts	29	4
	- Steering pinion nut	13	1.75
	- Steering rack ball joint housing	33	4.5
	- Track rod mounting	40	5.5
	- Track rod to track arm ball joint nut	31	4.25
	- Flector bolts	11	1.5
	- Flector to column mounting	7.25	1
	- Steering wheel mounting	33	4.5

GENERAL
TIGHTENING TORQUES

COMPONENT	PART	Tightening Ft/lbs	Torque M/kg
BRAKES	**Drum Brakes**		
	- Front brake plate bolts	43.5	6
	- Wheel cylinder bolts	11	1.5
	- Bleed screw	10	1.3
	- Brake fluid reservoir to Master cylinder mounting	33	4.5
	- Stop light switch	25	3.5
	Disc brakes		
	- Brake caliper support bolts	43.5	6
	- Brake caliper bolts	51	7
	- Disc mounting bolts	40	5.5
	- Brake fluid reservoir to Master cylinder mounting	11	1.5
	- Flexible hose union	25	3.5
	- Feed pipe union	13	1.75
REAR SUSPENSION	**404 Saloons - Convertibles - Coupés**		
	- Upper and lower shock absorber mounting	9	1.25
	- Antiroll bar to bodywork mounting	43.5	6
	- Antiroll bar to yoke mounting	40	5.5
	- Antiroll bar yoke to differential mounting	25	3,5
	404 Family Car and Station wagon		
	- Shock absorber pivots upper	40	5.5
	- Shock absorber pivots lower	34	4,75
	- Spring support to axle tube mounting	40	5.5
	- Antiroll bar to axle tube mounting	40	5.5
	- Antiroll bar to hull or crossmember mounting	43.5	6
	- Upper shock absorber yoke to crossmember mounting	18	2.5
	404 Light Vans		
	- Upper and lower shock absorber support mounting	40	5.5
	- Spring brackets	62	8.5
	- Front and rear spring pivots	65	9
WHEELS	- Saloons - Convertibles - Coupés	43.5	6
	- Associated Vehicles	58	8

GENERAL
IDENTIFICATION OF VEHICLES

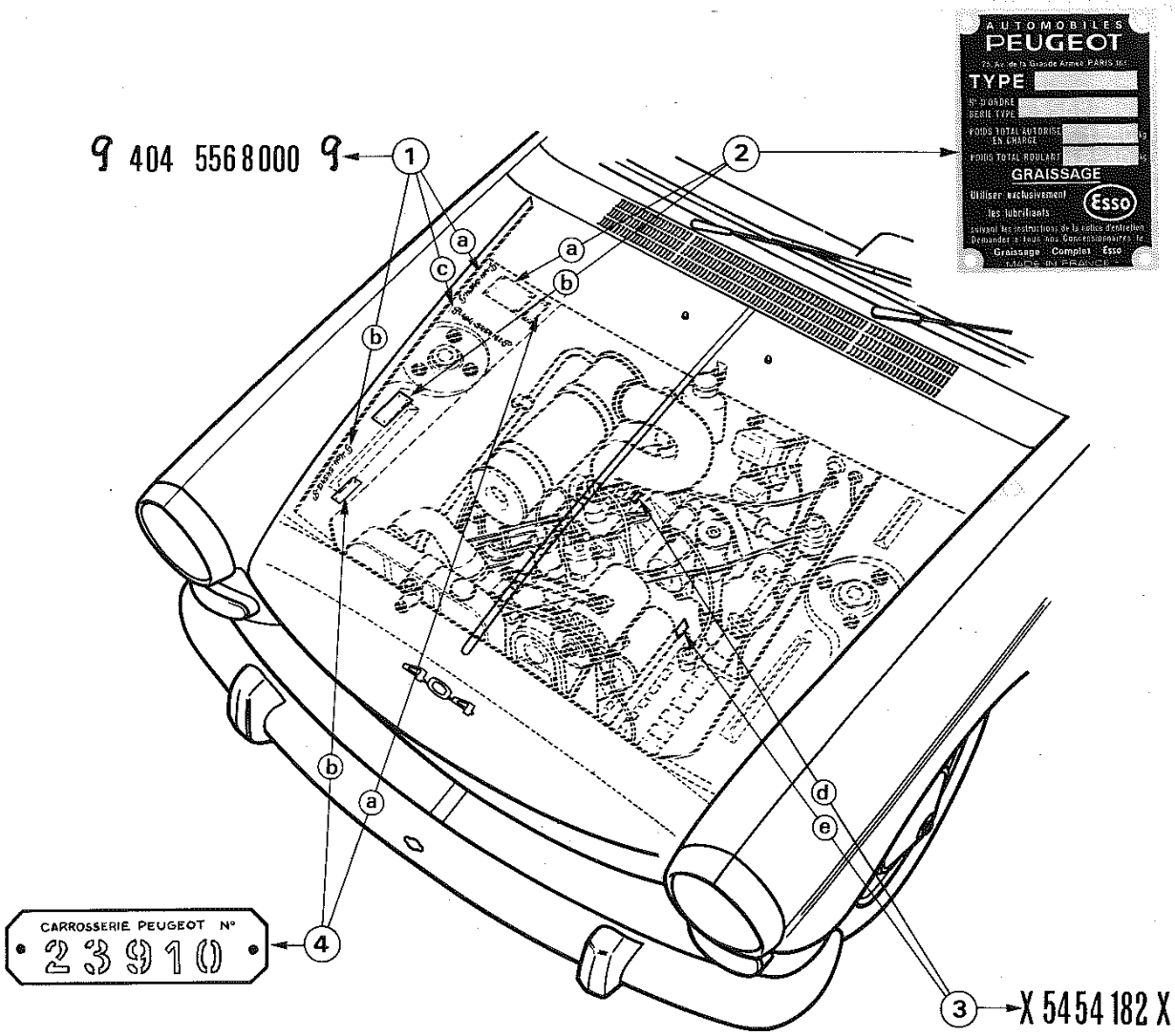

1 - Serial number
2 - Manufacturer's plate
3 - Serial number on the engine
4 - Bodywork number

NOTE *- Alteration of the inscriptions and plate location :*

- On front R.H. wing valance.

a - Up to October 1962
b - Since October 1962
c - Since January 1966

- On the engine

d - Up to February 1963
e - Since February 1963

GENERAL
IDENTIFICATION OF COMPONENTS

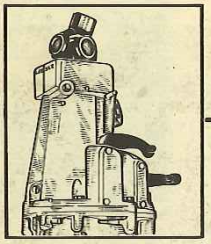
BA7 Gearbox

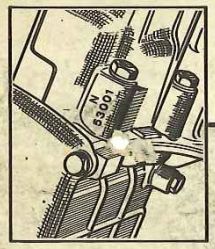
C3 Gearbox


Starter Motor

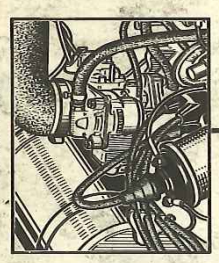
Carburettor

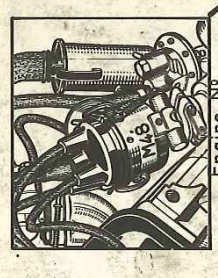
Distributor

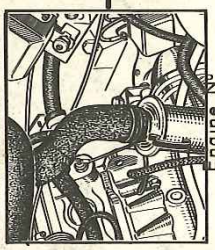
Engine Nº
Since October 1965

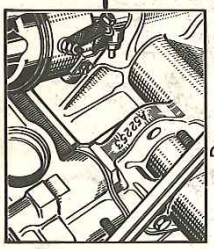
Engine Nº
Up to October 1965


Dynamo

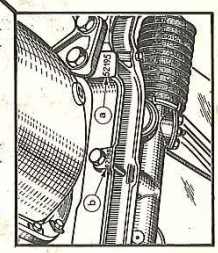
Rear axle
1st at (a) - 2nd at (b)

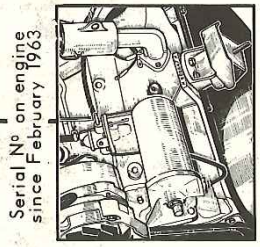
Serial Nº on engine
since February 1963

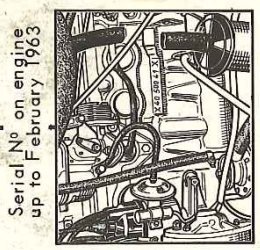
Serial Nº on engine
up to February 1963

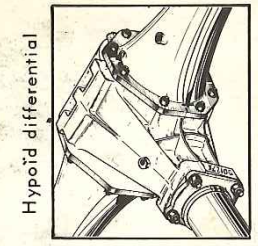
Hypoïd differential

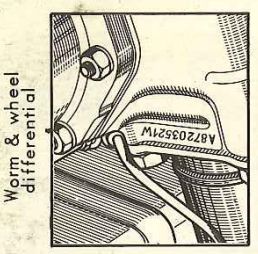
Worm & wheel
differential